Product Approval
USER: Public User

FL #	FL17897-R16
Application Type	Revision
Code Version	2023
Application Status	Approved
Comments	
Archived	☐
Product Manufacturer	E.S. Windows, Inc.
Address/Phone/Email	10653 NE Quaybridge Ct. Miami, FL 33138 (305) 638-5151 ssabagh@energiasolarsa.com
Authorized Signature	Jalal Farooq veronica@afceng.com
Technical Representative	Samir Sabagh
Address/Phone/Email	3550 NW 49th St. Miami, FL 33142 (305) 638-5151 ssabagh@energiasolarsa.com
Quality Assurance Representative	
Address/Phone/Email	
Category	Panel Walls
Subcategory	Storefronts
Compliance Method	Evaluation Report from a Florida Registered Architect or a Licensed Florida Professional Engineer ☐ Evaluation Report - Hardcopy Received
Florida Engineer or Architect Name who developed the Evaluation Report	Jalal Farooq
Florida License	PE-81223
Quality Assurance Entity	Keystone Certifications, Inc.
Quality Assurance Contract Expiration Date	03/21/2035
Validated By	Abel Carrasco, PE ☑ Validation Checklist - Hardcopy Received
Certificate of Independence	FL17897_R16_COI_SS - Certificate of Independence 2023.pdf

Referenced Standard and Year (of Standard)

Standard	Year
AAMA 501	2015
TAS 201	1994
TAS 202	1994
TAS 203	1994

Equivalence of Product Standards
Certified By

Sections from the Code

Product Approval Method	Method 1 Option D
Date Submitted	03/19/2025
Date Validated	04/24/2025
Date Pending FBC Approval	04/25/2025
Date Approved	06/10/2025
Date Revised	08/19/2025

Summary of Products

FL #	Model, Number or Name	Description
17897.1	Series ES-8000 Aluminum Window Wall System	Large missile impact resistant aluminum window wall system.
Limits of Use **Approved for use in HVHZ:** Yes **Approved for use outside HVHZ:** Yes **Impact Resistant:** Yes **Design Pressure:** +130/-130 **Other:** See drawing W17-92 for span vs load combinations and installation details.		**Installation Instructions** FL17897_R16_II_SS - 8000 WW (LMI) - DWG W17-92 2023 R1.1.pdf Verified By: Jalal Farooq PE# 81223 Created by Independent Third Party: Yes **Evaluation Reports** FL17897_R16_AE_SS - ES-8000 WW (LMI)-PAE 2023.pdf Created by Independent Third Party: Yes
17897.2	Series ES-8000 Aluminum Window Wall System	Small missile impact resistant aluminum window wall system.
Limits of Use **Approved for use in HVHZ:** Yes **Approved for use outside HVHZ:** Yes **Impact Resistant:** Yes **Design Pressure:** +100/-150 **Other:** See drawing 23-06F for span vs load combinations and installation details.		**Installation Instructions** FL17897_R16_II_SS - 8000 WW (SMI) - DWG 23-06F 2023 R1.1.pdf Verified By: Jalal Farooq PE # 81223 Created by Independent Third Party: Yes **Evaluation Reports** FL17897_R16_AE_SS - ES-8000 WW (SMI)-PAE 2023.pdf Created by Independent Third Party: Yes
17897.3	Series ES-8000T Aluminum Window Wall System	Non-impact resistant aluminum window wall system.
Limits of Use **Approved for use in HVHZ:** Yes **Approved for use outside HVHZ:** Yes **Impact Resistant:** No **Design Pressure:** +80/-100 **Other:** See drawing 24-71F for span vs load combinations and installation details.		**Installation Instructions** FL17897_R16_II_SS - ES-8000T WW (NI) - DWG 24-71F 2023 R1.pdf Verified By: Jalal Farooq PE 81223 Created by Independent Third Party: Yes **Evaluation Reports** FL17897_R16_AE_SS - ES-8000T Window Wall (NI)-PAE 2023.pdf Created by Independent Third Party: Yes
17897.4	Series ES-8000T Aluminum Window Wall System	Small missile impact resistant aluminum window wall system.
Limits of Use **Approved for use in HVHZ:** Yes **Approved for use outside HVHZ:** Yes **Impact Resistant:** Yes **Design Pressure:** +60/-60 **Other:** See drawing 21-12F for span vs load combinations and installation details.		**Installation Instructions** FL17897_R16_II_SS - 8000T WW (SMI) - DWG 21-12F 2023 R1.pdf Verified By: Jalal Farooq PE #81223 Created by Independent Third Party: Yes **Evaluation Reports** FL17897_R16_AE_SS - ES-8000T WW (SMI)-PAE 2023.pdf Created by Independent Third Party: Yes
17897.5	Series ES-8000T Aluminum Window Wall System	Large missile impact resistant aluminum window wall system.
Limits of Use **Approved for use in HVHZ:** Yes **Approved for use outside HVHZ:** Yes **Impact Resistant:** Yes **Design Pressure:** +90/-120 **Other:** See drawing W15-37 for span vs load combinations and installation details.		**Installation Instructions** FL17897_R16_II_SS - 8000T WW (LMI) - DWG W15-37 2023 R1.pdf Verified By: Jalal Farooq PE# 81223 Created by Independent Third Party: Yes **Evaluation Reports** FL17897_R16_AE_SS - ES-8000T WW (LMI)-PAE 2023.pdf Created by Independent Third Party: Yes

17897.6	Series ES-8000T Jumbo Aluminum Window Wall System	Large missile impact resistant aluminum window wall system.
Limits of Use **Approved for use in HVHZ:** Yes **Approved for use outside HVHZ:** Yes **Impact Resistant:** Yes **Design Pressure:** +70/-70 **Other:** See drawing 21-58F for span vs load combinations and installation details.		**Installation Instructions** FL17897_R16_II_SS - 8000T (JUMBO) WW (LMI) - DWG 21-58F 2023 R1.pdf Verified By: Jalal Farooq PE # 81223 Created by Independent Third Party: Yes **Evaluation Reports** FL17897_R16_AE_SS - ES-8000T Jumbo WW (LMI)-PAE 2023.pdf Created by Independent Third Party: Yes

Back Next

Contact Us :: 2601 Blair Stone Road, Tallahassee FL 32399 Phone: 850-487-1824

The State of Florida is an AA/EEO employer. Copyright 2007-2013 State of Florida. :: Privacy Statement :: Accessibility Statement :: Refund Statement

Under Florida law, email addresses are public records. If you do not want your e-mail address released in response to a public-records request, do not send electronic mail to this entity. Instead, contact the office by phone or by traditional mail. If you have any questions, please contact 850.487.1395. *Pursuant to Section 455.275(1), Florida Statutes, effective October 1, 2012, licensees licensed under Chapter 455, F.S. must provide the Department with an email address if they have one. The emails provided may be used for official communication with the licensee. However email addresses are public record. If you do not wish to supply a personal address, please provide the Department with an email address which can be made available to the public. To determine if you are a licensee under Chapter 455, F.S., please click here .

Product Approval Accepts:

Credit Card Safe securityMETRICS

SERIES 8000 ALUMINUM WINDOW WALL SYSTEM

THIS PRODUCT HAS BEEN DESIGNED AND TESTED TO COMPLY WITH THE REQUIREMENTS OF THE 2023 (8TH EDITION) FLORIDA BUILDING CODE INCLUDING HIGH VELOCITY HURRICANE ZONE (HVHZ).

1BY OR 2BY WOOD BUCKS & BUCK FASTENERS BY OTHERS, MUST BE DESIGNED AND INSTALLED ADEQUATELY TO TRANSFER APPLIED PRODUCT LOADS TO THE BUILDING STRUCTURE.

ANCHORS SHALL BE CORROSION RESISTANT, SPACED AS SHOWN ON DETAILS AND INSTALLED PER MANUF'S INSTRUCTIONS. SPECIFIED EMBEDMENT TO BASE MATERIAL SHALL BE BEYOND WALL DRESSING OR STUCCO.

A LOAD DURATION INCREASE IS USED IN DESIGN OF ANCHORS INTO WOOD ONLY.

ALL SHIMS TO BE HIGH IMPACT, NON-METALLIC AND NON-COMPRESSIBLE.

MATERIALS INCLUDING BUT NOT LIMITED TO STEEL/METAL SCREWS, THAT COME INTO CONTACT WITH OTHER DISSIMILAR MATERIALS SHALL MEET THE REQUIREMENTS OF THE 2023 FLORIDA BLDG. CODE & ADOPTED STANDARDS.

THIS PRODUCT APPROVAL IS GENERIC AND DOES NOT PROVIDE INFORMATION FOR A SITE SPECIFIC PROJECT, i.e. LIFE SAFETY OF THIS PRODUCT, ADEQUACY OF STRUCTURE RECEIVING THIS PRODUCT AND SEALING AROUND OPENING FOR WATER INFILTRATION RESISTANCE ETC.
CONDITIONS NOT SHOWN IN THIS DRAWING ARE TO BE ANALYZED SEPARATELY, AND TO BE REVIEWED BY BUILDING OFFICIAL.

DESIGN LOADS SHOWN ARE BASED ON 'ALLOWABLE STRESS DESIGN (ASD)'.

MANUFACTURER'S LABEL SHALL BE LOCATED ON A READILY VISIBLE LOCATION IN ACCORDANCE WITH SECTION 1709.9.3 OF FLORIDA BUILDING CODE. LABELING TO COMPLY WITH SECTION 1709.9.2.

INSTRUCTIONS:

USE CHARTS AS FOLLOWS.

STEP 1 DETERMINE DESIGN WIND LOAD REQUIREMENT BASED ON WIND VELOCITY, BLDG. HEIGHT, WIND ZONE USING APPLICABLE ASCE 7 STANDARD.

STEP 2 SEE CHARTS ON SHEET 3 FOR DESIGN LOAD CAPACITY OF DESIRED GLASS SIZE.

STEP 3 CHECK MULLION CAPACITY FOR A GIVEN SPACING AND HEIGHT USING CHARTS ON SHEETS 4 & 5 FOR WINDOW WALL MULLION AND SHEETS 8 THRU 10 FOR DOOR MULLION
THE CAPACITY SHOULD EXCEED THE DESIGN LOAD.

STEP 4 CHECK ANCHOR CAPACITY FOR WINDOW WALL SYSTEM USING CHARTS ON SHEETS 7
FOR DOOR MULLION ANCHOR CAPACITY SEE CHART ON SHEETS 11 & 12.
THE CAPACITY SHOULD EXCEED THE DESIGN LOAD.

STEP 5 THE LOWEST VALUE RESULTING FROM STEPS 2, 3 AND 4 SHALL APPLY TO ENTIRE SYSTEM.

THIS SYSTEM IS RATED FOR SMALL MISSILE IMPACT.
F.B.C. APPROVED IMPACT RESISTANT SHUTTERS
REQUIRED FOR INSTALLATIONS UP TO 30 FT. OF GRADE.
SHUTTERS NOT REQD. FOR INSTALLATIONS ABOVE 30 FT. OF GRADE.

WINDOW WALL SYSTEM WITH GLASS TYPE 'B' ONLY
COMPLY WITH REQUIREMENTS OF ANSI Z97.1.

LAMINATED GLASS
SMALL MISSILE IMPACT

Sealed: 4/7/2025

FL #17897

A- CONTRACTOR TO BE RESPONSIBLE FOR THE SELECTION, PURCHASE AND INSTALLATION OF THIS PRODUCT BASED ON THIS PRODUCT EVALUATION PROVIDED HE/SHE DOES NOT DEVIATE FROM THE CONDITIONS DETAILED ON THIS DOCUMENT.

B- THIS PRODUCT EVALUATION DOCUMENT WILL BE CONSIDERED INVALID IF ALTERED BY ANY MEANS.

C- SITE SPECIFIC PROJECTS SHALL BE PREPARED BY A FLORIDA REGISTERED ENGINEER OR ARCHITECT WHICH WILL BECOME THE ENGINEER OF RECORD (E.O.R.) FOR THE PROJECT AND WHO WILL BE RESPONSIBLE FOR THE PROPER USE OF THE P.E.D. ENGINEER OF RECORD, ACTING AS A DELEGATED ENGINEER TO THE P.E.D. ENGINEER SHALL SUBMIT TO THIS LATTER THE SITE SPECIFIC DRAWINGS FOR REVIEW.

D- THIS P.E.D. SHALL BEAR THE DATE AND ORIGINAL SEAL AND SIGNATURE OF THE PROFESSIONAL ENGINEER OF RECORD THAT PREPARED IT.

JALAL FAROOQ
LICENSE
No. 81223
STATE OF FLORIDA
PROFESSIONAL ENGINEER

AL-FAROOQ CORPORATION
ENGINEERS & PRODUCT DEVELOPMENT
9360 SUNSET DRIVE, SUITE 220
MIAMI, FLORIDA 33173
TEL. (305) 264-8100
WWW.AFCENG.COM
FBPE #3538

STORE\23-06F-ES

SERIES 8000 ALUMINUM WINDOW WALL SYSTEM (S.M.I.)

E.S. WINDOWS, LLC
3550 N.W. 49 STREET
MIAMI, FL. 33142
TEL. (305) 638-5151 FAX. (305) 638-5158

revisions:

no	date	by	description
A	04.24.23		CHART SHEET 4.1 & 5.1 REV.
B	07.25.23		UPDATED TO 2023 FBC
C	06.11.24		LOUVER NOTE ADDED

date: 01-25-23
scale: 1/2"=1'-0"
dr. by: TARIQ
chk. by:

drawing no.
23-06F

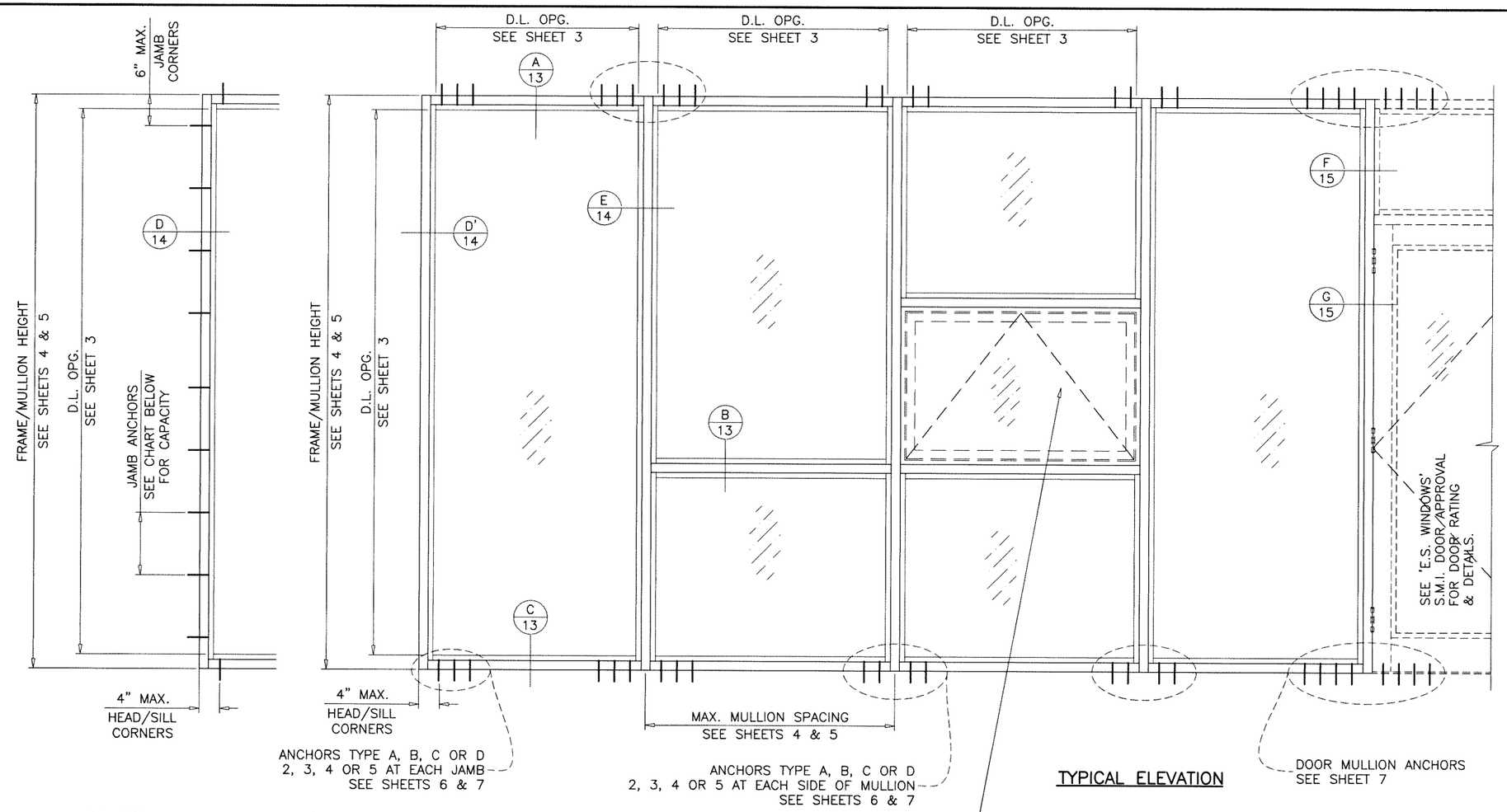

TYPICAL ELEVATION

WINDOWS AND LOUVERS, SUPPORTED BY APPROVALS
CAN BE INSTALLED WITHIN THE DAYLIGHT OPENING
ALLOWED AREA NOT TO EXCEED THE TESTED GLASS AREA
AND MAX. MULLION SPACING PER CHARTS ON SHEETS 4, 4.1, 5 & 5.1
PROVIDED THESE ARE PROPERLY SECURED WITH SCREWS
AT PERIMETER OF OPENING.
INSTALLATION AND COMPLIANCE WITH CODE SHALL BE VERIFIED INDEPENDENTLY
PTAC UNITS USED AS WINDOW INSERT TO BE ENGINEERED SEPARATELY
FOR MULLION CAPACITY, ANCHORS, ASYMMETRICAL LOADS ETC.

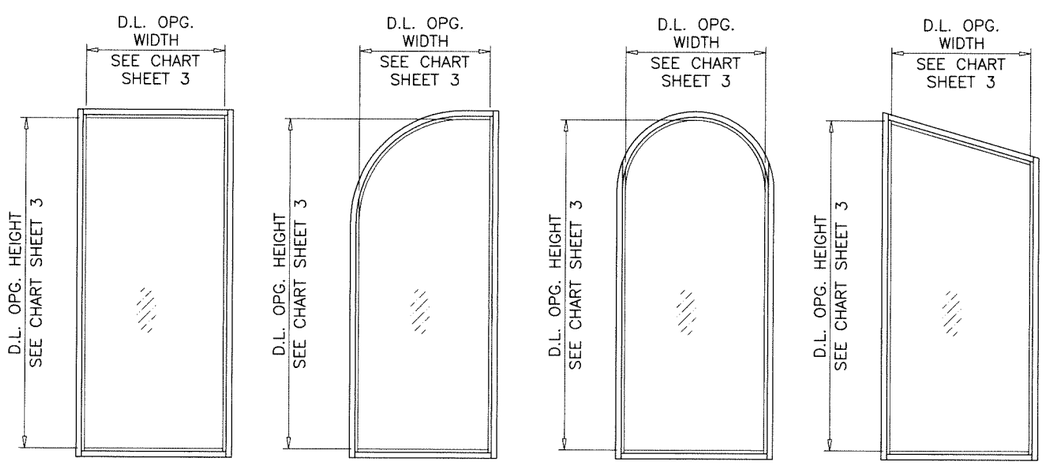

ALLOWABLE LOADS FOR ALTERNATE SHAPES AS SHOWN ABOVE OR SIMILAR CAN BE VERIFIED BY INSCRIBING PICTURE WINDOW SHAPE WITHIN SQUARE OR RECTANGLE AS SHOWN IN DOTTED LINES AND OBTAINING ALLOWABLE LOADS FROM THOSE SHAPES. SINGLE LITES MAY BE INSTALLED VERTICALLY AS SHOWN ABOVE OR HORIZONTALLY. ANCHORS AT ALTERNATE SHAPES TO BE ALL AROUND SPACED AS PER JAMB ANCHORS.
LIMIT MAX. DESIGN LOADS FOR ALTERNATE SHAPES TO ±130.0 PSF

JAMB ANCHORS LOAD CAPACITY					
		12" SPACING		6" SPACING	
	WIDTH (W)	ANCHORS A, B & C	ANCHORS D	ANCHORS A, B & C	ANCHORS D
SHIMS 1/4" MAX.	48"	125.0	138.0	150.0	150.0
	60"	100.0	110.0	130.0	130.0
	72"	83.0	92.0	130.0	130.0
SHIMS 3/8" MAX.	48"	91.0	130.0	150.0	150.0
	60"	73.0	104.0	130.0	130.0
	72"	61.0	87.0	122.0	130.0
SHIMS 1/2" MAX.	48"	71.0	102.0	142.0	150.0
	60"	56.0	82.0	113.0	130.0
	72"	47.0	68.0	94.0	130.0

LIMIT MAX. EXTERIOR(+) LOADS TO +100.0 PSF
INTERPOLATION BETWEEN WIDTHS ALLOWED

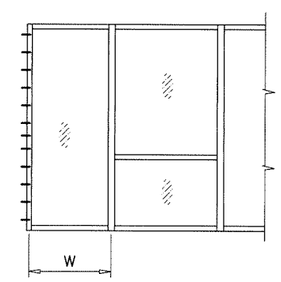

Sealed: 4/7/2025

FL #17897

JALAL FAROOQ
LICENSE
No. 81223
STATE OF FLORIDA
PROFESSIONAL ENGINEER

AL-FAROOQ CORPORATION
ENGINEERS & PRODUCT DEVELOPMENT
9360 SUNSET DRIVE, SUITE 220
MIAMI, FLORIDA 33173
TEL. (305) 264-8100
WWW.AFCENG.COM
FBPE #3538

STORE\23-06F-ES

SERIES 8000 ALUMINUM WINDOW WALL SYSTEM (S.M.I.)

E.S. WINDOWS, LLC
3550 N.W. 49 STREET
MIAMI, FL. 33142
TEL. (305) 638-5151 FAX. (305) 638-5158

revisions:

no	date	by	description

date: 01-25-23
scale: 1/2"=1'-0"
dr. by: TARIQ
chk. by:

drawing no. 23-06F

GLASS LOAD CAPACITY – PSF					
NOMINAL DIMS.		GLASS TYPE 'A'		GLASS TYPE 'B'	
D.L.O. WIDTH	D.L.O. HEIGHT	EXT.(+)	INT.(–)	EXT.(+)	INT.(–)
26–1/4"	72–1/2"	100.0	130.0	100.0	150.0
32–1/4"		100.0	130.0	100.0	150.0
38–1/4"		100.0	130.0	100.0	150.0
44–1/4"		100.0	130.0	100.0	150.0
50–1/4"		100.0	130.0	88.9	133.3
56–1/4"		100.0	130.0	80.0	120.0
62–1/4"		90.9	118.2	72.7	109.1
68–1/4"		83.3	108.3	66.7	100.0
26–1/4"	78–1/2"	100.0	130.0	100.0	150.0
32–1/4"		100.0	130.0	100.0	150.0
38–1/4"		100.0	130.0	100.0	150.0
44–1/4"		100.0	130.0	100.0	150.0
50–1/4"		100.0	130.0	88.9	133.3
56–1/4"		100.0	130.0	80.0	120.0
62–1/4"		90.9	118.2	72.7	109.1
68–1/4"		60.0	60.0	–	–
26–1/4"	84–1/2"	100.0	130.0	100.0	150.0
32–1/4"		100.0	130.0	100.0	150.0
38–1/4"		100.0	130.0	100.0	150.0
44–1/4"		100.0	130.0	100.0	150.0
50–1/4"		100.0	130.0	88.9	133.3
56–1/4"		100.0	130.0	80.0	120.0
62–1/4"		65.5	65.5	–	–
68–1/4"		60.0	60.0	–	–
26–1/4"	90–1/2"	100.0	130.0	100.0	150.0
32–1/4"		100.0	130.0	100.0	150.0
38–1/4"		100.0	130.0	100.0	150.0
44–1/4"		100.0	130.0	100.0	150.0
50–1/4"		100.0	130.0	88.9	133.3
56–1/4"		100.0	130.0	80.0	120.0
62–1/4"		65.5	65.5	–	–
68–1/4"		60.0	60.0	–	–
26–1/4"	96–1/2"	100.0	130.0	100.0	150.0
32–1/4"		100.0	130.0	100.0	150.0
38–1/4"		100.0	130.0	100.0	150.0
44–1/4"		100.0	130.0	100.0	150.0
50–1/4"		100.0	130.0	88.9	133.3
56–1/4"		72.0	72.0	–	–
62–1/4"		65.5	65.5	–	–
26–1/4"	102–1/2"	100.0	130.0	100.0	150.0
32–1/4"		100.0	130.0	100.0	150.0
38–1/4"		100.0	130.0	100.0	150.0
44–1/4"		100.0	130.0	100.0	150.0
50–1/4"		80.0	80.0	–	–
56–1/4"		72.0	72.0	–	–
26–1/4"	108–1/2"	100.0	130.0	100.0	150.0
32–1/4"		100.0	130.0	100.0	150.0
38–1/4"		100.0	130.0	100.0	150.0
44–1/4"		100.0	130.0	100.0	150.0
50–1/4"		80.0	80.0	–	–
56–1/4"		72.0	72.0	–	–

GLASS LOAD CAPACITY – PSF					
NOMINAL DIMS.		GLASS TYPE 'A'		GLASS TYPE 'B'	
D.L.O. WIDTH	D.L.O. HEIGHT	EXT.(+)	INT.(–)	EXT.(+)	INT.(–)
26–1/4"	114–1/2"	100.0	130.0	100.0	150.0
32–1/4"		100.0	130.0	100.0	150.0
38–1/4"		100.0	130.0	100.0	150.0
44–1/4"		100.0	130.0	100.0	150.0
50–1/4"		80.0	80.0	–	–
26–1/4"	120–1/2"	100.0	130.0	100.0	150.0
32–1/4"		100.0	130.0	100.0	150.0
38–1/4"		100.0	130.0	100.0	150.0
44–1/4"		90.0	90.0	–	–
50–1/4"		80.0	80.0	–	–
26–1/4"	126–1/2"	100.0	130.0	100.0	150.0
32–1/4"		100.0	130.0	100.0	150.0
38–1/4"		100.0	130.0	100.0	150.0
44–1/4"		90.0	90.0	–	–
26–1/4"	132–1/2"	100.0	130.0	100.0	150.0
32–1/4"		100.0	130.0	100.0	150.0
38–1/4"		90.0	90.0	–	–
44–1/4"		90.0	90.0	–	–
26–1/4"	138–1/2"	100.0	130.0	100.0	150.0
32–1/4"		100.0	130.0	100.0	150.0
38–1/4"		90.0	90.0	–	–
44–1/4"		90.0	90.0	–	–

INTERPOLATION BETWEEN WIDTHS ALLOWED.

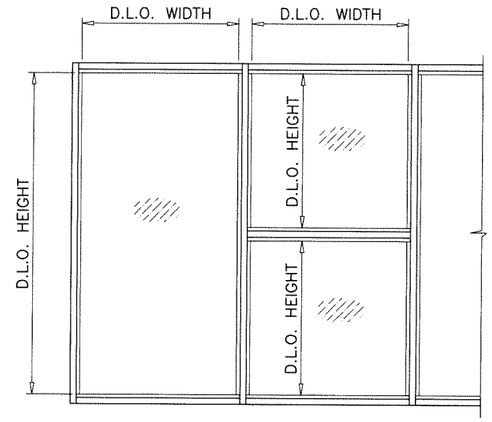

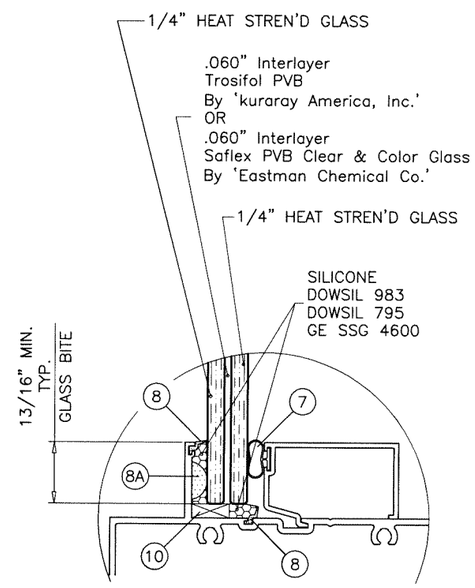

GLASS TYPE 'A'

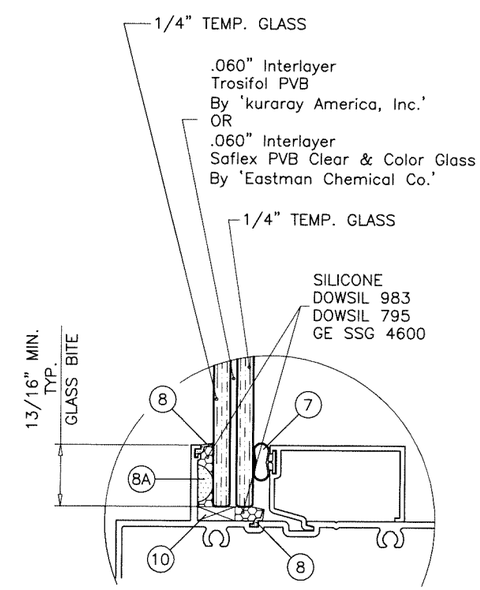

GLASS TYPE 'B'

GLAZING OPTIONS

Sealed: 4/7/2025

NOTE:
GLASS CAPACITIES ON THIS SHEET ARE BASED ON ASTM E1300–09 (3 SEC. GUSTS).

GLASS

FL #17897

JALAL FAROOQ LICENSE No. 81223 STATE OF FLORIDA PROFESSIONAL ENGINEER

AL-FAROOQ CORPORATION
ENGINEERS & PRODUCT DEVELOPMENT
9360 SUNSET DRIVE, SUITE 220
MIAMI, FLORIDA 33173
TEL. (305) 264-8100
WWW.AFCENG.COM
FBPE #3538

STORE\23–06F–ES

SERIES 8000 ALUMINUM WINDOW WALL SYSTEM (S.M.I.)

E.S. WINDOWS, LLC
3550 N.W. 49 STREET
MIAMI, FL. 33142
TEL. (305) 638–5151 FAX. (305) 638–5158

revisions:

no	date	by	description

date: 01–25–23
scale: 1/2" = 1"
dr. by: TARIQ
chk. by:

drawing no. 23–06F

MULLION LOAD CAPACITY – PSF
JAMB & MULLION WITHOUT INTERMEDIATE HORIZONTALS

NOMINAL DIMS.		JAMB 'J2'	MULL 'M1'	MULL 'M2'	MULL 'M3'	MULL 'M4'
WIDTH (W)	FRAME HEIGHT	EXT. (+) INT. (–)	EXT. (+) INT. (–)	EXT. (+) INT. (–)	EXT. (+) INT. (–)	EXT. (+) INT. (–)
30"	90"	130.0	130.0	130.0	130.0	130.0
36"		130.0	130.0	130.0	130.0	130.0
42"		130.0	130.0	130.0	130.0	130.0
48"		130.0	130.0	130.0	130.0	130.0
54"		130.0	122.9	130.0	130.0	130.0
60"		130.0	114.9	130.0	130.0	130.0
66"		–	–	–	–	90.0
72"		–	–	–	–	90.0
30"	96"	130.0	130.0	130.0	130.0	130.0
36"		130.0	130.0	130.0	130.0	130.0
42"		130.0	121.1	130.0	130.0	130.0
48"		130.0	108.6	130.0	130.0	130.0
54"		130.0	99.4	130.0	125.6	130.0
60"		130.0	92.4	130.0	116.3	130.0
66"		–	–	–	–	90.0
72"		–	–	–	–	90.0
30"	102"	130.0	130.0	130.0	130.0	130.0
36"		130.0	114.5	130.0	130.0	130.0
42"		130.0	100.0	130.0	130.0	130.0
48"		130.0	89.5	130.0	120.9	130.0
54"		130.0	81.6	130.0	109.8	130.0
56"		130.0	79.4	127.7	106.7	128.2
60"		–	–	–	–	90.0
66"		–	–	–	–	90.0
30"	108"	130.0	113.5	130.0	130.0	130.0
36"		130.0	95.9	130.0	130.0	130.0
42"		130.0	83.6	130.0	120.3	130.0
48"		130.0	74.6	120.0	107.0	128.5
53"		130.0	68.8	110.7	98.4	118.2
54"		–	–	–	–	90.0
60"		–	–	–	–	90.0
30"	114"	130.0	96.2	130.0	130.0	130.0
36"		130.0	81.2	130.0	123.8	130.0
42"		130.0	70.6	113.6	107.4	129.1
48"		130.0	62.9	101.1	95.3	114.5
50"		130.0	60.8	97.7	92.0	110.5
54"		–	–	–	–	90.0
60"		–	–	–	–	90.0
30"	120"	130.0	82.3	130.0	130.0	130.0
36"		130.0	69.3	111.5	111.4	130.0
42"		130.0	60.2	96.9	96.5	116.0
48"		130.0	53.5	86.1	85.5	102.8
54"		90.0	–	–	77.5	90.0
30"	126"	90.0	–	–	90.0	90.0
36"		90.0	–	–	90.0	90.0
42"		90.0	–	–	87.6	90.0
48"		90.0	–	–	77.5	90.0
54"		90.0	–	–	69.8	83.5

MULLION LOAD CAPACITY – PSF
JAMB & MULLION WITHOUT INTERMEDIATE HORIZONTALS

NOMINAL DIMS.		JAMB 'J2'	MULL 'M1'	MULL 'M2'	MULL 'M3'	MULL 'M4'
WIDTH (W)	FRAME HEIGHT	EXT. (+) INT. (–)	EXT. (+) INT. (–)	EXT. (+) INT. (–)	EXT. (+) INT. (–)	EXT. (+) INT. (–)
30"	132"	90.0	–	–	90.0	90.0
36"		90.0	–	–	90.0	90.0
42"		90.0	–	–	79.5	90.0
48"		90.0	–	–	70.3	84.1
30"	138"	90.0	–	–	90.0	90.0
36"		90.0	–	–	84.0	90.0
42"		90.0	–	–	72.6	86.8
48"		90.0	–	–	64.1	76.7
30"	144"	90.0	–	–	90.0	90.0
36"		90.0	–	–	77.0	90.0
42"		90.0	–	–	66.5	79.5
48"		90.0	–	–	58.7	70.2

INTERPOLATION BETWEEN WIDTHS ALLOWED.

NOTE:
LIMIT MAXIMUM EXTERIOR(+) LOADS TO 100.0 PSF

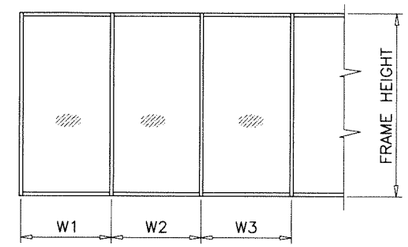

WIDTH (W) = W1
AT FRAME JAMB

WIDTH (W) = $\frac{W2 + W3}{2}$
AT FRAME MULLION

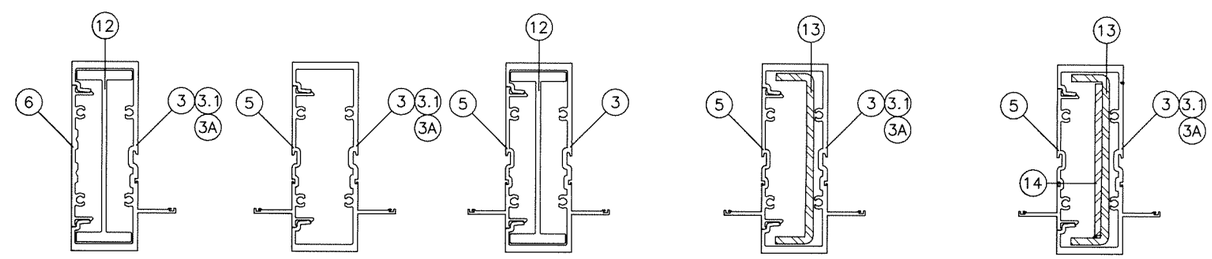

JAMB 'J2'

Ix IN^4	Sx IN^3
10.6486	4.4452

MULLION 'M1'

Ix IN^4	Sx IN^3
6.7195	2.6757

MULLION 'M2'

Ix IN^4	Sx IN^3
10.8072	3.7590

MULLION 'M3'

	Ix IN^4	Sx IN^3
ALUMINUM	6.7195	2.6757
STEEL	2.7506	1.2225
TOTAL Ix ALUM + Ix STL X 2.9	14.6962	

MULLION 'M4'

	Ix IN^4	Sx IN^3
ALUMINUM	6.7195	2.6757
STEEL	3.7533	1.668
TOTAL Ix ALUM + Ix STL X 2.9	17.6047	

MULLIONS

Sealed: 4/7/2025

JALAL FAROOQ
LICENSE
No. 81223
STATE OF FLORIDA
PROFESSIONAL ENGINEER

FL #17897

AL-FAROOQ CORPORATION
ENGINEERS & PRODUCT DEVELOPMENT
9360 SUNSET DRIVE, SUITE 220
MIAMI, FLORIDA 33173
TEL. (305) 264-8100
WWW.AFCENG.COM
FBPE #3538

STORE\23-06F-ES

SERIES 8000 ALUMINUM WINDOW WALL SYSTEM (S.M.I.)

E.S. WINDOWS, LLC
3550 N.W. 49 STREET
MIAMI, FL. 33142
TEL. (305) 638-5151 FAX. (305) 638-5158

revisions:

no	date	by	description

date: 01-25-23
scale: –
dr. by: TARIQ
chk. by:

drawing no. 23-06F

sheet 4 of 18

MULLION LOAD CAPACITY – PSF
JAMB & MULLION WITHOUT INTERMEDIATE HORIZONTALS

NOMINAL DIMS.		JAMB 'J1'	JAMB 'J3'	MULL 'M5'	MULL 'M6'
WIDTH (W)	FRAME HEIGHT	EXT. (+) INT. (–)	EXT. (+) INT. (–)	EXT. (+) INT. (–)	EXT. (+) INT. (–)
30"	90"	130.0	150.0	150.0	150.0
36"		130.0	150.0	150.0	150.0
42"		130.0	150.0	150.0	150.0
48"		130.0	150.0	150.0	150.0
54"		130.0	150.0	150.0	150.0
60"		130.0	150.0	150.0	150.0
66"		–	90.0	90.0	90.0
72"		–	90.0	90.0	90.0
30"	96"	130.0	150.0	150.0	150.0
36"		130.0	150.0	150.0	150.0
42"		130.0	150.0	150.0	150.0
48"		130.0	150.0	150.0	150.0
54"		130.0	150.0	150.0	150.0
60"		130.0	150.0	150.0	150.0
66"		–	90.0	90.0	90.0
72"		–	90.0	90.0	90.0
30"	102"	130.0	150.0	150.0	150.0
36"		114.5	150.0	150.0	150.0
42"		100.0	150.0	150.0	150.0
48"		89.5	150.0	150.0	150.0
54"		81.6	150.0	150.0	150.0
60"		–	90.0	90.0	90.0
66"		–	90.0	90.0	90.0
30"	108"	113.5	150.0	150.0	150.0
36"		95.9	150.0	150.0	150.0
42"		83.6	150.0	150.0	150.0
48"		74.6	150.0	149.6	150.0
54"		–	90.0	90.0	90.0
60"		–	90.0	90.0	90.0
30"	114"	96.2	150.0	150.0	150.0
36"		81.2	150.0	150.0	150.0
42"		70.6	150.0	150.0	150.0
48"		62.9	150.0	133.3	150.0
54"		–	90.0	90.0	90.0
60"		–	90.0	90.0	90.0
30"	120"	82.3	150.0	150.0	150.0
36"		69.3	150.0	150.0	150.0
42"		60.2	150.0	135.0	150.0
48"		53.5	150.0	119.6	133.3
54"		–	90.0	90.0	90.0
30"	126"	–	90.0	90.0	90.0
36"		–	90.0	90.0	90.0
42"		–	90.0	90.0	90.0
48"		–	90.0	90.0	90.0
54"		–	90.0	90.0	90.0
30"	132"	–	90.0	90.0	90.0
36"		–	90.0	90.0	90.0
42"		–	90.0	90.0	90.0
48"		–	90.0	90.0	90.0
30"	138"	–	90.0	90.0	90.0
36"		–	90.0	90.0	90.0
42"		–	90.0	90.0	90.0
48"		–	90.0	86.2	86.2
30"	144"	–	90.0	90.0	90.0
36"		–	90.0	90.0	90.0
42"		–	90.0	85.5	85.5
48"		–	90.0	75.6	75.6

INTERPOLATION BETWEEN WIDTHS ALLOWED.

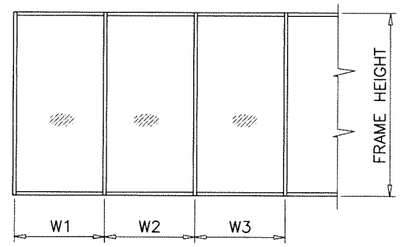

WIDTH (W) = W1
AT FRAME JAMB

WIDTH (W) = $\frac{W2 + W3}{2}$
AT FRAME MULLION

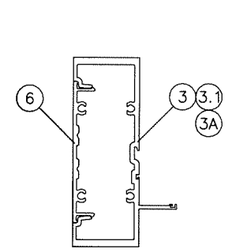

JAMB 'J1'

Ix IN^4	Sx IN^3
6.6509	2.6421

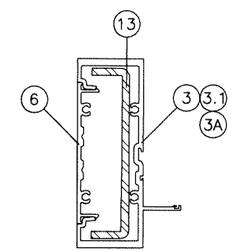

JAMB 'J3'

	Ix IN^4	Sx IN^3
ALUMINUM	6.6509	2.6421
STEEL	2.7506	1.2225
TOTAL Ix ALUM + Ix STL X 2.9	14.6276	

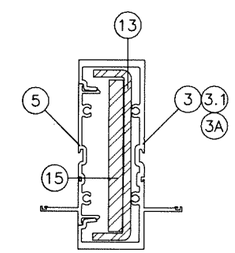

MULLION 'M5'

	Ix IN^4	Sx IN^3
ALUMINUM	6.7195	2.6757
STEEL	4.7506	2.1114
TOTAL Ix ALUM + Ix STL X 2.9	20.3598	

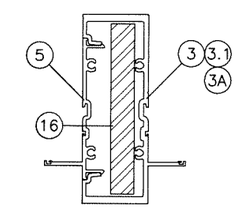

MULLION 'M6'

	Ix IN^4	Sx IN^3
ALUMINUM	6.7195	2.6757
STEEL	4.746	2.109
TOTAL Ix ALUM + Ix STL X 2.9	20.3464	

MULLIONS

Sealed: 4/7/2025

JALAL FAROOQ LICENSE No. 81223 STATE OF FLORIDA PROFESSIONAL ENGINEER

NOTE:
LIMIT MAXIMUM EXTERIOR(+) LOADS TO 100.0 PSF

FL #17897

AL-FAROOQ CORPORATION
ENGINEERS & PRODUCT DEVELOPMENT
9360 SUNSET DRIVE, SUITE 220
MIAMI, FLORIDA 33173
TEL. (305) 264-8100
WWW.AFCENG.COM
FBPE #3538

STORE\23-06F-ES

SERIES 8000 ALUMINUM WINDOW WALL SYSTEM (S.M.I.)

E.S. WINDOWS, LLC
3550 N.W. 49 STREET
MIAMI, FL. 33142
TEL. (305) 638-5151 FAX. (305) 638-5158

revisions:

no	date	by	description

date: 01-25-23
scale: –
dr. by: TARIQ
chk. by:

drawing no. 23-06F

sheet 4.1 of 18

MULLION LOAD CAPACITY – PSF
JAMB & MULLION WITH INTERMEDIATE HORIZONTALS

NOMINAL DIMS.		JAMB 'J2'	MULL 'M1'	MULL 'M2'	MULL 'M3'	MULL 'M4'
WIDTH (W)	FRAME HEIGHT	EXT. (+) INT. (–)	EXT. (+) INT. (–)	EXT. (+) INT. (–)	EXT. (+) INT. (–)	EXT. (+) INT. (–)
30"	78"	130.0	130.0	130.0	130.0	130.0
36"		130.0	130.0	130.0	130.0	130.0
42"		130.0	130.0	130.0	130.0	130.0
48"		130.0	130.0	130.0	130.0	130.0
54"		130.0	130.0	130.0	130.0	130.0
60"		130.0	130.0	130.0	130.0	130.0
30"	90"	130.0	130.0	130.0	130.0	130.0
36"		130.0	130.0	130.0	130.0	130.0
42"		130.0	130.0	130.0	130.0	130.0
48"		130.0	119.2	130.0	130.0	130.0
54"		130.0	105.9	130.0	128.1	130.0
60"		130.0	95.3	130.0	115.3	130.0
30"	96"	130.0	130.0	130.0	130.0	130.0
36"		130.0	130.0	130.0	130.0	130.0
42"		130.0	112.2	130.0	130.0	130.0
48"		130.0	98.2	130.0	126.7	130.0
54"		130.0	87.3	130.0	112.6	130.0
60"		130.0	78.5	122.1	101.4	130.0
30"	102"	130.0	130.0	130.0	130.0	130.0
36"		130.0	109.1	130.0	130.0	130.0
42"		130.0	93.6	130.0	128.3	130.0
48"		130.0	81.9	130.0	112.2	130.0
54"		130.0	72.8	117.0	99.8	130.0
56"		130.0	70.2	112.8	96.2	130.0
60"		–	–	–	–	130.0
30"	108"	130.0	110.3	130.0	130.0	130.0
36"		130.0	91.9	130.0	130.0	130.0
42"		130.0	78.8	126.8	114.4	130.0
48"		130.0	69.0	110.9	100.1	120.3
53"		130.0	62.5	100.4	90.7	108.9
54"		–	–	–	–	90.0
60"		–	–	–	–	90.0
30"	114"	130.0	93.8	130.0	130.0	130.0
36"		130.0	78.2	125.7	119.8	130.0
42"		130.0	67.0	107.8	102.7	123.4
48"		130.0	58.6	94.3	89.8	108.0
50"		130.0	56.3	90.5	86.2	103.6
54"		–	–	–	–	90.0
60"		–	–	–	–	86.4
30"	120"	130.0	80.4	129.4	129.7	130.0
36"		130.0	67.0	107.8	108.1	129.9
42"		130.0	57.5	92.4	92.7	111.3
48"		130.0	50.3	80.9	81.1	97.4
54"		90.0	–	–	72.4	86.6
30"	126"	90.0			90.0	90.0
36"		90.0	–	–	90.0	90.0
42"		90.0	–	–	84.4	90.0
48"		90.0	–	–	73.9	88.4
54"		90.0	–	–	65.6	78.5

MULLION LOAD CAPACITY – PSF
JAMB & MULLION WITH INTERMEDIATE HORIZONTALS

NOMINAL DIMS.		JAMB 'J2'	MULL 'M1'	MULL 'M2'	MULL 'M3'	MULL 'M4'
WIDTH (W)	FRAME HEIGHT	EXT. (+) INT. (–)	EXT. (+) INT. (–)	EXT. (+) INT. (–)	EXT. (+) INT. (–)	EXT. (+) INT. (–)
30"	132"	90.0	–	–	90.0	90.0
36"		90.0	–	–	89.7	90.0
42"		90.0	–	–	76.9	90.0
48"		90.0	–	–	67.3	80.5
30"	138"	90.0	–	–	90.0	90.0
36"		90.0	–	–	82.1	90.0
42"		90.0	–	–	70.4	84.2
48"		90.0	–	–	61.6	73.7
30"	144"	90.0	–	–	90.0	90.0
36"		90.0	–	–	75.4	90.0
42"		90.0	–	–	64.6	77.3
48"		90.0	–	–	56.5	67.7

INTERPOLATION BETWEEN WIDTHS ALLOWED.

NOTE:
LIMIT MAXIMUM EXTERIOR(+) LOADS TO 100.0 PSF

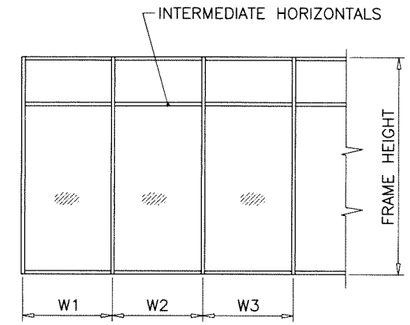

WIDTH (W) = W1
AT FRAME JAMB

WIDTH (W) = $\frac{W2 + W3}{2}$
AT FRAME MULLION

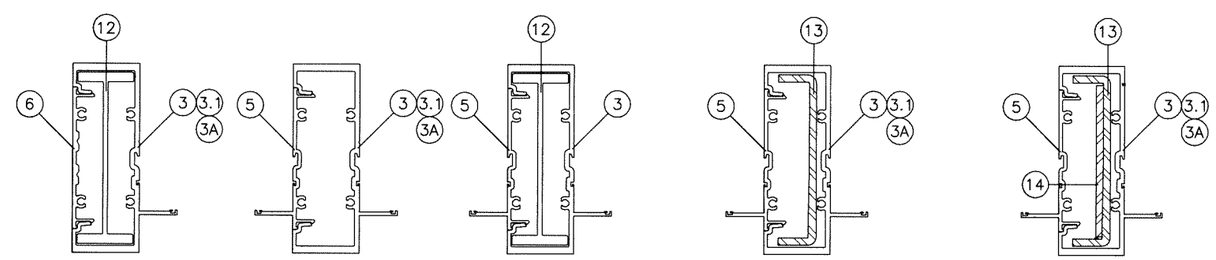

JAMB 'J2'

Ix IN^4	Sx IN^3
10.6486	4.4452

MULLION 'M1'

Ix IN^4	Sx IN^3
6.7195	2.6757

MULLION 'M2'

Ix IN^4	Sx IN^3
10.8072	3.7590

MULLION 'M3'

	Ix IN^4	Sx IN^3
ALUMINUM	6.7195	2.6757
STEEL	2.7506	1.2225
TOTAL Ix ALUM + Ix STL X 2.9	14.6962	

MULLION 'M4'

	Ix IN^4	Sx IN^3
ALUMINUM	6.7195	2.6757
STEEL	3.7533	1.668
TOTAL Ix ALUM + Ix STL X 2.9	17.6047	

MULLIONS

Sealed: 4/7/2025

JALAL FAROOQ LICENSE No. 81223 STATE OF FLORIDA PROFESSIONAL ENGINEER

FL #17897

AL-FAROOQ CORPORATION
ENGINEERS & PRODUCT DEVELOPMENT
9360 SUNSET DRIVE, SUITE 220
MIAMI, FLORIDA 33173
TEL. (305) 264-8100
WWW.AFCENG.COM
FBPE #3538

STORE\23-06F-ES

SERIES 8000 ALUMINUM WINDOW WALL SYSTEM (S.M.I.)

E.S. WINDOWS, LLC
3550 N.W. 49 STREET
MIAMI, FL. 33142
TEL. (305) 638-5151 FAX. (305) 638-5158

revisions:

no	date	by	description

date: 01-25-23
scale: –
dr. by: TARIQ
chk. by:

drawing no. 23-06F

sheet 5 of 18

MULLION LOAD CAPACITY – PSF
JAMB & MULLION WITH INTERMEDIATE HORIZONTALS

NOMINAL DIMS.		JAMB 'J1'	JAMB 'J3'	MULL 'M5'	MULL 'M6'
WIDTH (W)	FRAME HEIGHT	EXT. (+) INT. (–)	EXT. (+) INT. (–)	EXT. (+) INT. (–)	EXT. (+) INT. (–)
30"	90"	130.0	150.0	150.0	150.0
36"		130.0	150.0	150.0	150.0
42"		130.0	150.0	150.0	150.0
48"		130.0	150.0	150.0	150.0
54"		130.0	150.0	150.0	150.0
60"		130.0	150.0	150.0	150.0
30"	96"	130.0	150.0	150.0	150.0
36"		130.0	150.0	150.0	150.0
42"		130.0	150.0	150.0	150.0
48"		130.0	150.0	150.0	150.0
54"		130.0	150.0	150.0	150.0
60"		130.0	150.0	141.8	150.0
30"	102"	130.0	150.0	150.0	150.0
36"		109.1	150.0	150.0	150.0
42"		93.6	150.0	150.0	150.0
48"		81.9	150.0	150.0	150.0
54"		72.8	150.0	139.5	150.0
60"		–	90.0	90.0	90.0
30"	108"	110.3	150.0	150.0	150.0
36"		91.9	150.0	150.0	150.0
42"		78.8	150.0	150.0	150.0
48"		69.0	150.0	140.0	150.0
54"		–	90.0	90.0	90.0
60"		–	90.0	90.0	90.0
30"	114"	93.8	150.0	150.0	150.0
36"		78.2	150.0	150.0	150.0
42"		67.0	150.0	143.6	150.0
48"		58.6	150.0	125.7	146.0
54"		–	90.0	90.0	90.0
60"		–	90.0	90.0	90.0
30"	120"	80.4	150.0	150.0	150.0
36"		67.0	150.0	150.0	150.0
42"		57.5	150.0	129.6	143.1
48"		50.3	150.0	113.4	125.2
54"		–	90.0	90.0	90.0
30"	126"	–	90.0	90.0	90.0
36"		–	90.0	90.0	90.0
42"		–	90.0	90.0	90.0
48"		–	90.0	90.0	90.0
54"		–	90.0	90.0	90.0
30"	132"	–	90.0	90.0	90.0
36"		–	90.0	90.0	90.0
42"		–	90.0	90.0	90.0
48"		–	90.0	90.0	90.0
30"	138"	–	90.0	90.0	90.0
36"		–	90.0	90.0	90.0
42"		–	90.0	90.0	90.0
48"		–	90.0	82.3	82.3
30"	144"	–	90.0	90.0	90.0
36"		–	90.0	90.0	90.0
42"		–	90.0	82.8	82.8
48"		–	90.0	72.4	72.4

INTERPOLATION BETWEEN WIDTHS ALLOWED.

NOTE:
LIMIT MAXIMUM EXTERIOR(+) LOADS TO 100.0 PSF

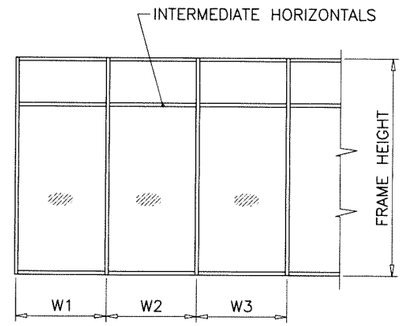

WIDTH (W) = W1
AT FRAME JAMB

WIDTH (W) = $\frac{W2 + W3}{2}$
AT FRAME MULLION

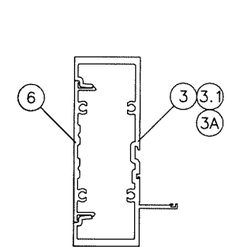

JAMB 'J1'

Ix IN^4	Sx IN^3
6.6509	2.6421

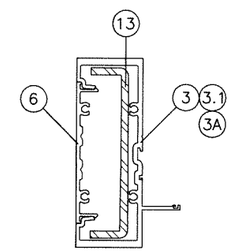

JAMB 'J3'

	Ix IN^4	Sx IN^3
ALUMINUM	6.6509	2.6421
STEEL	2.7506	1.2225
TOTAL Ix ALUM + Ix STL X 2.9	14.6276	

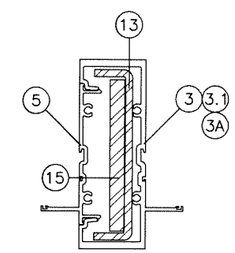

MULLION 'M5'

	Ix IN^4	Sx IN^3
ALUMINUM	6.7195	2.6757
STEEL	4.7506	2.1114
TOTAL Ix ALUM + Ix STL X 2.9	20.3598	

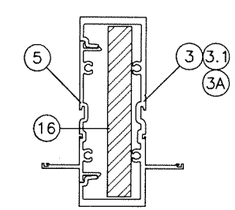

MULLION 'M6'

	Ix IN^4	Sx IN^3
ALUMINUM	6.7195	2.6757
STEEL	4.746	2.109
TOTAL Ix ALUM + Ix STL X 2.9	20.3464	

MULLIONS

Sealed: 4/7/2025

JALAL FAROOQ
LICENSE
No. 81223
STATE OF FLORIDA
PROFESSIONAL ENGINEER

FL #17897

AL-FAROOQ CORPORATION
ENGINEERS & PRODUCT DEVELOPMENT
9360 SUNSET DRIVE, SUITE 220
MIAMI, FLORIDA 33173
TEL. (305) 264-8100
FBPE #3538
WWW.AFCENG.COM

STORE\23-06F-ES

SERIES 8000 ALUMINUM WINDOW WALL SYSTEM (S.M.I.)

E.S. WINDOWS, LLC
3550 N.W. 49 STREET
MIAMI, FL. 33142
TEL. (305) 638-5151 FAX. (305) 638-5158

revisions:

no	date	by	description

date: 01-25-23
scale: –
dr. by: TARIQ
chk. by:

drawing no. 23-06F

sheet 5.1 of 18

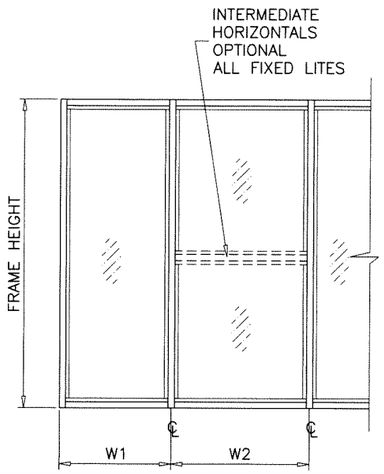

$$\text{WIDTH (W)} = \frac{W1 + W2}{2}$$

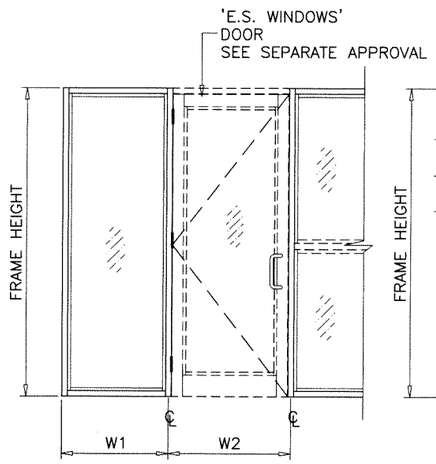

$$\text{WIDTH (W)} = \frac{W1 + W2}{2}$$

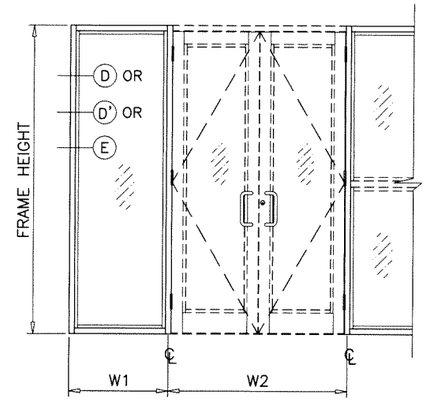

$$\text{WIDTH (W)} = \frac{W1}{2} + \frac{W2}{4}$$

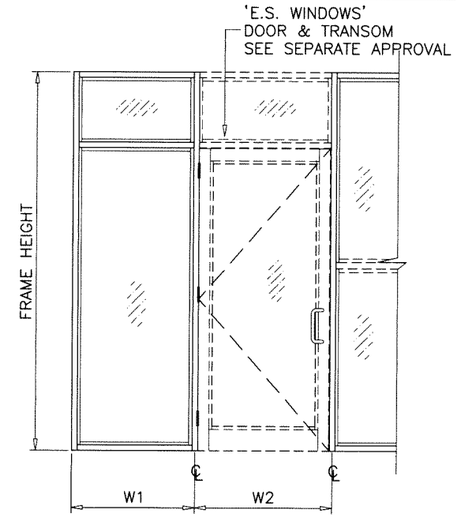

$$\text{WIDTH (W)} = \frac{W1 + W2}{2}$$

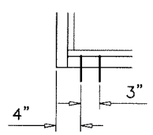

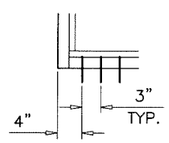

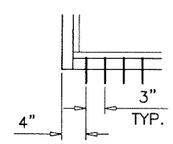

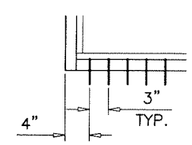

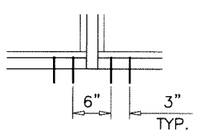

A2, B2, C2, D2

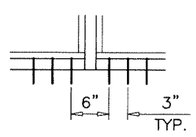

A3, B3, C3, D3

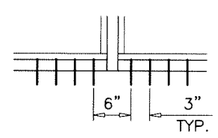

A4, B4, C4, D4

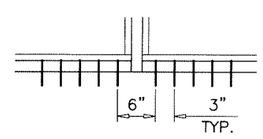

A5, B5, C5

ANCHORS TYPES: SEE SHEET 13 FOR DESCRIPTION

A2 = (2) ANCHORS TYPE 'A' AT EACH SIDE OF JAMB AND MULLION
B2 = (2) ANCHORS TYPE 'B' AT EACH SIDE OF JAMB AND MULLION
C2 = (2) ANCHORS TYPE 'C' AT EACH SIDE OF JAMB AND MULLION
D2 = (2) ANCHORS TYPE 'D' AT EACH SIDE OF JAMB AND MULLION

A3 = (3) ANCHORS TYPE 'A' AT EACH SIDE OF JAMB AND MULLION
B3 = (3) ANCHORS TYPE 'B' AT EACH SIDE OF JAMB AND MULLION
C3 = (3) ANCHORS TYPE 'C' AT EACH SIDE OF JAMB AND MULLION
D3 = (3) ANCHORS TYPE 'D' AT EACH SIDE OF JAMB AND MULLION

A4 = (4) ANCHORS TYPE 'A' AT EACH SIDE OF JAMB AND MULLION
B4 = (4) ANCHORS TYPE 'B' AT EACH SIDE OF JAMB AND MULLION
C4 = (4) ANCHORS TYPE 'C' AT EACH SIDE OF JAMB AND MULLION
D4 = (4) ANCHORS TYPE 'D' AT EACH SIDE OF JAMB AND MULLION

A5 = (5) ANCHORS TYPE 'A' AT EACH SIDE OF JAMB AND MULLION
B5 = (5) ANCHORS TYPE 'B' AT EACH SIDE OF JAMB AND MULLION
C5 = (5) ANCHORS TYPE 'C' AT EACH SIDE OF JAMB AND MULLION

ALL OTHER ANCHORS TO BE SPACED AS PER ELEVATION.

SEE SHEETS 7 FOR ANCHOR CAPACITY CHART.

ANCHORS

Sealed: 4/7/2025

JALAL FAROOQ
LICENSE
No. 81223
STATE OF FLORIDA
PROFESSIONAL ENGINEER

FL #17897

AL-FAROOQ CORPORATION
ENGINEERS & PRODUCT DEVELOPMENT
9360 SUNSET DRIVE, SUITE 220
MIAMI, FLORIDA 33173
TEL. (305) 264-8100
WWW.AFCENG.COM
FBPE #3538

STORE\23-06F-ES

SERIES 8000 ALUMINUM WINDOW WALL SYSTEM (S.M.I.)

E.S. WINDOWS, LLC
3550 N.W. 49 STREET
MIAMI, FL. 33142
TEL. (305) 638-5151 FAX. (305) 638-5158

revisions:

no	date	by	description

date: 01-25-23
scale: –
dr. by: TARIQ
chk. by:

drawing no. 23-06F

ANCHOR LOAD CAPACITY – PSF

EXT.(+) & INT.(–)

NOMINAL DIMS.		3/8" MAX. SHIM SPACE												1/2" MAX. SHIM SPACE												1/4" SHIM SPACE		
		ANCHORS TYPE 'A'				ANCHORS TYPE 'B'				ANCHORS TYPE 'C'				ANCHORS TYPE 'A'				ANCHORS TYPE 'B'				ANCHORS TYPE 'C'				ANCHORS TYPE 'D'		
WIDTH (W)	FRAME HEIGHT	A2	A3	A4	A5	B2	B3	B4	B5	C2	C3	C4	C5	A2	A3	A4	A5	B2	B3	B4	B5	C2	C3	C4	C5	D2	D3	D4
30"	90"	56.8	85.2	113.6	150.0	65.4	98.0	130.7	150.0	111.4	130.0	150.0	150.0	44.3	66.5	88.7	110.8	51.3	76.9	102.6	128.2	87.7	130.0	150.0	150.0	130.0	130.0	150.0
36"		47.3	71.0	94.6	118.3	54.5	81.7	108.9	136.2	92.8	130.0	150.0	150.0	36.9	55.4	73.9	92.4	42.7	64.1	85.5	106.8	73.1	109.7	146.2	150.0	130.0	130.0	150.0
42"		40.6	60.8	81.1	101.4	46.7	70.0	93.4	116.7	79.6	119.4	150.0	150.0	31.7	47.5	63.3	79.2	36.6	54.9	73.3	91.6	62.7	94.0	125.3	150.0	119.2	130.0	150.0
48"		35.5	53.2	71.0	88.7	40.9	61.3	81.7	102.1	69.6	104.4	139.3	150.0	27.7	41.6	55.4	69.3	32.1	48.1	64.1	80.1	54.8	82.2	109.7	137.1	104.3	130.0	150.0
54"		31.5	47.3	63.1	78.9	36.3	54.5	72.6	90.8	61.9	92.8	123.8	150.0	24.6	36.9	49.3	61.6	28.5	42.7	57.0	71.2	48.7	73.1	97.5	121.8	92.7	130.0	150.0
60"		28.4	42.6	56.8	71.0	32.7	49.0	65.4	81.7	55.7	83.6	111.4	139.3	22.2	33.2	44.3	55.4	25.6	38.5	51.3	64.1	43.9	65.8	87.7	109.7	83.4	125.1	150.0
66"		25.8	38.7	51.6	64.5	29.7	44.6	59.4	74.3	50.6	76.0	90.0	90.0	20.2	30.2	40.3	50.4	23.3	35.0	46.6	58.3	39.9	59.8	79.7	90.0	75.8	90.0	90.0
72"		23.7	35.5	47.3	59.2	27.2	40.9	54.5	68.1	46.4	69.6	90.0	90.0	–	27.7	36.9	46.2	21.4	32.1	42.7	53.4	36.6	54.8	73.1	90.0	69.5	90.0	90.0
30"	96"	53.2	79.9	106.5	133.1	61.3	91.9	122.6	150.0	104.4	130.0	150.0	150.0	41.6	62.3	83.1	103.9	48.1	72.1	96.2	120.2	82.2	123.4	150.0	150.0	130.0	130.0	150.0
36"		44.4	66.6	88.7	110.9	51.1	76.6	102.1	127.7	87.0	130.0	150.0	150.0	34.6	52.0	69.3	86.6	40.1	60.1	80.1	100.2	68.5	102.8	137.1	150.0	130.0	130.0	150.0
40"		39.9	59.9	79.9	99.8	46.0	68.9	91.9	114.9	78.3	117.5	150.0	150.0	31.2	46.8	62.3	77.9	36.1	54.1	72.1	90.2	61.7	92.5	123.4	150.0	117.3	130.0	150.0
42"		38.0	57.0	76.1	95.1	43.8	65.7	87.5	109.4	74.6	111.9	149.2	150.0	29.7	44.5	59.4	74.2	34.3	51.5	68.7	85.9	58.7	88.1	117.5	146.9	111.7	130.0	150.0
48"		33.3	49.9	66.6	83.2	38.3	57.5	76.6	95.8	65.3	97.9	130.6	150.0	26.0	39.0	52.0	64.9	30.1	45.1	60.1	75.1	51.4	77.1	102.8	128.5	97.8	130.0	150.0
54"		29.6	44.4	59.2	73.9	34.0	51.1	68.1	85.1	58.0	87.0	116.0	145.1	23.1	34.6	46.2	57.7	26.7	40.1	53.4	66.8	45.7	68.5	91.4	114.2	86.9	130.0	150.0
60"		26.6	39.9	53.2	66.6	30.6	46.0	61.3	76.6	52.2	78.3	104.4	130.6	20.8	31.2	41.6	52.0	24.0	36.1	48.1	60.1	41.1	61.7	82.2	102.8	78.2	117.3	150.0
66"		24.2	36.3	48.4	60.5	27.9	41.8	55.7	69.6	47.5	71.2	90.0	90.0	–	28.3	37.8	47.2	21.9	32.8	43.7	54.6	37.4	56.1	74.8	90.0	71.1	90.0	90.0
72"		22.2	33.3	44.4	55.5	25.5	38.3	51.1	63.8	43.5	65.3	87.0	90.0	–	26.0	34.6	43.3	20.0	30.1	40.1	50.1	34.3	51.4	68.5	85.7	65.2	90.0	90.0
30"	102"	50.1	75.2	100.2	125.3	57.7	86.5	115.4	144.2	98.3	130.0	150.0	150.0	39.1	58.7	78.2	97.8	45.3	67.9	90.5	113.1	77.4	116.1	150.0	150.0	130.0	130.0	150.0
36"		41.8	62.6	83.5	104.4	48.1	72.1	96.1	120.2	81.9	122.9	150.0	150.0	32.6	48.9	65.2	81.5	37.7	56.6	75.4	94.3	64.5	96.8	129.0	150.0	122.7	130.0	150.0
42"		35.8	53.7	71.6	89.5	41.2	61.8	82.4	103.0	70.2	105.3	140.4	150.0	27.9	41.9	55.9	69.8	32.3	48.5	64.6	80.8	55.3	82.9	110.6	138.2	105.1	130.0	150.0
48"		31.3	47.0	62.6	78.3	36.0	54.1	72.1	90.1	61.4	92.2	122.9	150.0	24.4	36.7	48.9	61.1	28.3	42.4	56.6	70.7	48.4	72.6	96.8	120.9	92.0	130.0	150.0
54"		27.8	41.8	55.7	69.6	32.0	48.1	64.1	80.1	54.6	81.9	109.2	136.5	21.7	32.6	43.5	54.3	25.1	37.7	50.3	62.8	43.0	64.5	86.0	107.5	81.8	122.7	150.0
60"		25.1	37.6	50.1	62.6	28.8	43.3	57.7	72.1	49.1	73.7	90.0	90.0	–	29.3	39.1	48.9	22.6	33.9	45.3	56.6	38.7	58.1	77.4	90.0	73.6	90.0	90.0
66"		22.8	34.2	45.6	56.9	26.2	39.3	52.4	65.5	44.7	67.0	89.4	90.0	–	26.7	35.6	44.4	20.6	30.9	41.1	51.4	35.2	52.8	70.4	88.0	66.9	90.0	90.0
30"	108"	47.3	71.0	94.6	118.3	54.5	81.7	108.9	136.2	92.8	130.0	150.0	150.0	36.9	55.4	73.9	92.4	42.7	64.1	85.5	106.8	73.1	109.7	146.2	150.0	130.0	130.0	150.0
36"		39.4	59.2	78.9	98.6	45.4	68.1	90.8	113.5	77.4	116.0	150.0	150.0	30.8	46.2	61.6	77.0	35.6	53.4	71.2	89.0	60.9	91.4	121.8	150.0	115.9	130.0	150.0
42"		33.8	50.7	67.6	84.5	38.9	58.4	77.8	97.3	66.3	99.5	132.6	150.0	26.4	39.6	52.8	66.0	30.5	45.8	61.1	76.3	52.2	78.3	104.4	130.5	99.3	130.0	150.0
48"		29.6	44.4	59.2	73.9	34.0	51.1	68.1	85.1	58.0	87.0	116.0	145.1	23.1	34.6	46.2	57.7	26.7	40.1	53.4	66.8	45.7	68.5	91.4	114.2	86.9	130.0	150.0
54"		26.3	39.4	52.6	65.7	30.3	45.4	60.5	75.7	51.6	77.4	90.0	90.0	20.5	30.8	41.0	51.3	23.7	35.6	47.5	59.4	40.6	60.9	81.2	90.0	77.2	90.0	90.0
60"		23.7	35.5	47.3	59.2	27.2	40.9	54.5	68.1	46.4	69.6	90.0	90.0	–	27.7	36.9	46.2	21.4	32.1	42.7	53.4	36.6	54.8	73.1	90.0	69.5	90.0	90.0
30"	114"	44.8	67.3	89.7	112.1	51.6	77.4	103.2	129.0	87.9	130.0	150.0	150.0	35.0	52.5	70.0	87.5	40.5	60.7	81.0	101.2	69.3	103.9	138.5	150.0	130.0	130.0	150.0
36"		37.4	56.0	74.7	93.4	43.0	64.5	86.0	107.5	73.3	109.9	146.6	150.0	29.2	43.7	58.3	72.9	33.7	50.6	67.5	84.4	57.7	86.6	115.4	144.3	109.8	130.0	150.0
42"		32.0	48.0	64.0	80.1	36.9	55.3	73.7	92.2	62.8	94.2	125.6	150.0	25.0	37.5	50.0	62.5	28.9	43.4	57.8	72.3	49.5	74.2	98.9	123.7	94.1	130.0	150.0
48"		28.0	42.0	56.0	70.1	32.3	48.4	64.5	80.6	55.0	82.5	109.9	137.4	21.9	32.8	43.7	54.7	25.3	38.0	50.6	63.3	43.3	64.9	86.6	108.2	82.3	123.5	150.0
54"		24.9	37.4	49.8	62.3	28.7	43.0	57.3	71.7	48.9	73.3	90.0	90.0	–	29.2	38.9	48.6	22.5	33.7	45.0	56.2	38.5	57.7	76.9	90.0	73.2	90.0	90.0
60"		22.4	33.6	44.8	56.0	25.8	38.7	51.6	64.5	44.0	66.0	87.9	90.0	–	26.2	35.0	43.7	20.2	30.4	40.5	50.6	34.6	51.9	69.3	86.6	65.9	90.0	90.0
30"	120"	42.6	63.9	85.2	106.5	49.0	73.5	98.0	122.6	83.6	125.3	150.0	150.0	33.2	49.9	66.5	83.1	38.5	57.7	76.9	96.2	65.8	98.7	131.6	150.0	125.1	130.0	150.0
36"		35.5	53.2	71.0	88.7	40.9	61.3	81.7	102.1	69.6	104.4	139.3	150.0	27.7	41.6	55.4	69.3	32.1	48.1	64.1	80.1	54.8	82.2	109.7	137.1	104.3	130.0	150.0
42"		30.4	45.6	60.8	76.1	35.0	52.5	70.0	87.5	59.7	89.5	119.4	149.2	23.7	35.6	47.5	59.4	27.5	41.2	54.9	68.7	47.0	70.5	94.0	117.5	89.4	130.0	150.0
48"		26.6	39.9	53.2	66.6	30.6	46.0	61.3	76.6	52.2	78.3	104.4	130.6	20.8	31.2	41.6	52.0	24.0	36.1	48.1	60.1	41.1	61.7	82.2	102.8	78.2	117.3	90.0
54"		23.7	35.5	47.3	59.2	27.2	40.9	54.5	68.1	46.4	69.6	90.0	90.0	–	27.7	36.9	46.2	21.4	32.1	42.7	53.4	36.6	54.8	73.1	90.0	69.5	90.0	90.0
30"	126"	40.6	60.8	81.1	90.0	46.7	70.0	90.0	90.0	79.6	90.0	90.0	90.0	31.7	47.5	63.3	79.2	36.6	54.9	73.3	90.0	62.7	90.0	90.0	90.0	90.0	90.0	90.0
36"		33.8	50.7	67.6	84.5	38.9	58.4	77.8	90.0	66.3	90.0	90.0	90.0	26.4	39.6	52.8	66.0	30.5	45.8	61.1	76.3	52.2	78.3	90.0	90.0	90.0	90.0	90.0
42"		29.0	43.5	57.9	72.4	33.3	50.0	66.7	83.4	56.8	85.3	90.0	90.0	22.6	33.9	45.2	56.5	26.2	39.2	52.3	65.4	44.8	67.1	89.5	90.0	85.1	90.0	90.0
48"		25.4	38.0	50.7	63.4	29.2	43.8	58.4	73.0	49.7	74.6	90.0	90.0	–	29.7	39.6	49.5	22.9	34.3	45.8	57.2	39.2	58.7	78.3	90.0	74.5	90.0	90.0
54"		22.5	33.8	45.1	56.3	25.9	38.9	51.9	64.8	44.2	66.3	88.4	90.0	–	26.4	35.2	44.0	20.4	30.5	40.7	50.9	34.8	52.2	69.6	87.0	66.2	90.0	90.0
30"	132"	38.7	58.1	77.4	90.0	44.6	66.9	89.1	90.0	76.0	90.0	90.0	90.0	30.2	45.3	60.5	75.6	35.0	52.5	69.9	87.4	59.8	89.7	90.0	90.0	90.0	90.0	90.0
36"		32.3	48.4	64.5	80.7	37.1	55.7	74.3	90.0	63.3	90.0	90.0	90.0	25.2	37.8	50.4	63.0	29.1	43.7	58.3	72.8	49.8	74.8	90.0	90.0	90.0	90.0	90.0
42"		27.7	41.5	55.3	69.1	31.8	47.8	63.7	79.6	54.3	81.4	90.0	90.0	21.6	32.4	43.2	54.0	25.0	37.5	50.0	62.4	42.7	64.1	85.4	90.0	81.2	90.0	90.0
48"		24.2	36.3	48.4	60.5	27.9	41.8	55.7	69.6	47.5	71.2	90.0	90.0	–	28.3	37.8	47.2	21.9	32.8	43.7	54.6	37.4	56.1	74.8	90.0	71.1	90.0	90.0
30"	138"	37.0	55.6	74.1	90.0	42.6	63.9	85.3	90.0	72.7	90.0	90.0	90.0	28.9	43.4	57.8	72.3	33.4	50.2	66.9	83.6	57.2	85.8	90.0	90.0	90.0	90.0	90.0
36"		30.9	46.3	61.7	77.2	35.5	53.3	71.0	88.8	60.5	90.0	90.0	90.0	24.1	36.1	48.2	60.2	27.9	41.8	55.7	69.7	47.7	71.5	90.0	90.0	90.0	90.0	90.0
42"		26.5	39.7	52.9	66.1	30.4	45.7	60.9	76.1	51.9	77.8	90.0	90.0	20.7	31.0	41.3	51.6	23.9	35.8	47.8	59.7	40.9	61.3	81.7	90.0	77.7	90.0	90.0
48"		23.1	34.7	46.3	57.9	26.6	40.0	53.3	66.6	45.4	68.1	90.0	90.0	–	27.1	36.1	45.2	20.9	31.4	41.8	52.3	35.8	53.6	71.5	89.4	68.0	90.0	90.0
30"	144"	35.5	53.2	71.0	88.7	40.9	61.3	81.7	90.0	69.6	90.0	90.0	90.0	27.7	41.6	55.4	69.3	32.1	48.1	64.1	80.1	54.8	82.2	90.0	90.0	90.0	90.0	90.0
36"		29.6	44.4	59.2	73.9	34.0	51.1	68.1	85.1	58.0	87.0	90.0	90.0	23.1	34.6	46.2	57.7	26.7	40.1	53.4	66.8	45.7	68.5	90.0	90.0	86.9	90.0	90.0
42"		25.4	38.0	50.7	63.4	29.2	43.8	58.4	73.0	49.7	74.6	90.0	90.0	–	29.7	39.6	49.5	22.9	34.3	45.8	57.2	39.2	58.7	78.3	90.0	74.5	90.0	90.0
48"		22.2	33.3	44.4	55.5	25.5	38.3	51.1	63.8	43.5	65.3	87.0	90.0	–	26.0	34.6	43.3	20.0	30.1	40.1	50.1	34.3	51.4	68.5	85.7	65.2	90.0	90.0

SEE SHEETS 6 AND 13 FOR ANCHOR DESCRIPTION.

LIMIT MAX. LOADS TO 130.0 PSF FOR INSTALLATIONS INTO WOOD STRUCTURES.

ANCHORS

Sealed: 4/7/2025

FL #17897

JALAL FAROOQ LICENSE No. 81223 STATE OF FLORIDA PROFESSIONAL ENGINEER

AL-FAROOQ CORPORATION
ENGINEERS & PRODUCT DEVELOPMENT
9360 SUNSET DRIVE, SUITE 220
MIAMI, FLORIDA 33173
TEL. (305) 264-8100
FBPE #3538
WWW.AFCENG.COM

STORE\23-06F-ES

SERIES 8000 ALUMINUM WINDOW WALL SYSTEM (S.M.I.)

E.S. WINDOWS, LLC
3550 N.W. 49 STREET
MIAMI, FL. 33142
TEL. (305) 638-5151 FAX. (305) 638-5158

revisions:

no	date	by	description

date: 01-25-23
scale: –
dr. by: TARIQ
chk. by:

drawing no. 23-06F

DOOR MULLION LOAD CAPACITY-PSF					
SIDELITE WIDTH INCHES	FRAME HEIGHT INCHES	JAMB 'JD1' MULL 'MD1'	JAMB 'JD1' MULL 'MD2'	JAMB 'JD2' JAMB 'JD3' MULL 'MD3'	JAMB 'JD3' MULL 'MD4'
		EXT. (+) INT. (−)	EXT. (+) INT. (−)	EXT. (+) INT. (−)	EXT. (+) INT. (−)
32	86−1/2	120.0	120.0	120.0	120.0
36		120.0	120.0	120.0	120.0
42		120.0	120.0	120.0	120.0
48		120.0	120.0	120.0	120.0
54		120.0	120.0	120.0	120.0
60		120.0	120.0	120.0	120.0
32	98−1/2	112.6	120.0	120.0	120.0
36		107.1	120.0	120.0	120.0
42		99.7	120.0	120.0	120.0
48		93.3	120.0	120.0	120.0
54		87.7	120.0	116.1	120.0
32	110−1/2	79.8	120.0	118.5	120.0
36		75.8	120.0	112.6	120.0
42		70.6	113.6	104.9	120.0
48		66.1	106.3	98.2	120.0
32	120	–	–	–	90.0
36		–	–	–	90.0
42		–	–	–	90.0
48		–	–	–	85.1

NOTE:
LIMIT MAXIMUM EXTERIOR(+) LOADS TO 100.0 PSF

DOOR MULLION LOAD CAPACITY-PSF					
SIDELITE WIDTH INCHES	FRAME HEIGHT INCHES	JAMB 'JD1' MULL 'MD1'	JAMB 'JD1' MULL 'MD2'	JAMB 'JD2' JAMB 'JD3' MULL 'MD3'	JAMB 'JD3' MULL 'MD4'
		EXT. (+) INT. (−)	EXT. (+) INT. (−)	EXT. (+) INT. (−)	EXT. (+) INT. (−)
32	98−1/2	90.0	90.0	90.0	90.0
36		90.0	90.0	90.0	90.0
42		90.0	90.0	90.0	90.0
48		90.0	90.0	90.0	90.0
54		87.7	90.0	90.0	90.0
32	110−1/2	79.8	90.0	90.0	90.0
36		75.8	90.0	90.0	90.0
42		70.6	90.0	90.0	90.0
48		66.1	90.0	90.0	90.0
32	114	72.6	90.0	90.0	90.0
36		69.1	90.0	90.0	90.0
42		64.3	90.0	90.0	90.0
48		60.2	90.0	90.0	90.0
32	120	62.3	90.0	90.0	90.0
36		59.2	90.0	90.0	90.0
42		55.2	88.7	89.1	90.0
48		51.6	83.0	83.4	90.0
32	144	–	–	–	90.0
36		–	–	–	89.8
42		–	–	–	83.6
48		–	–	–	78.3

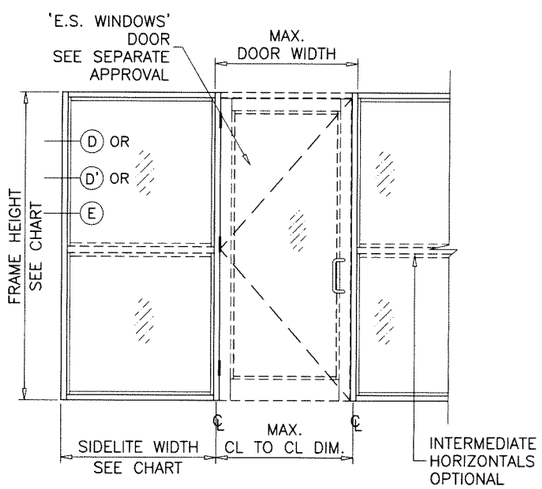

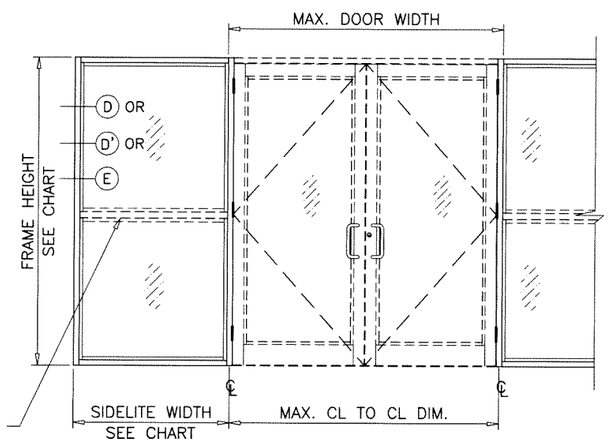

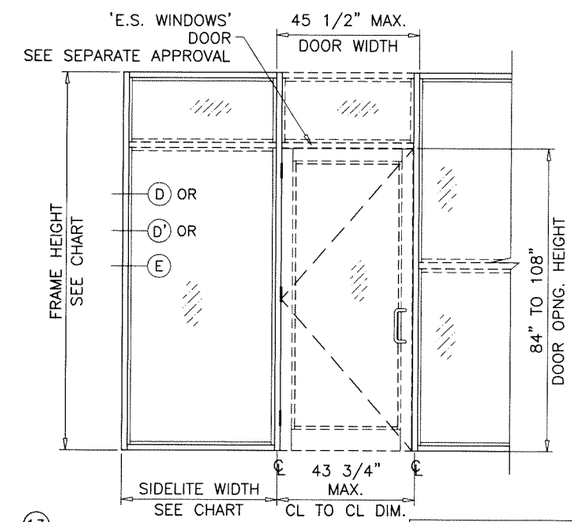

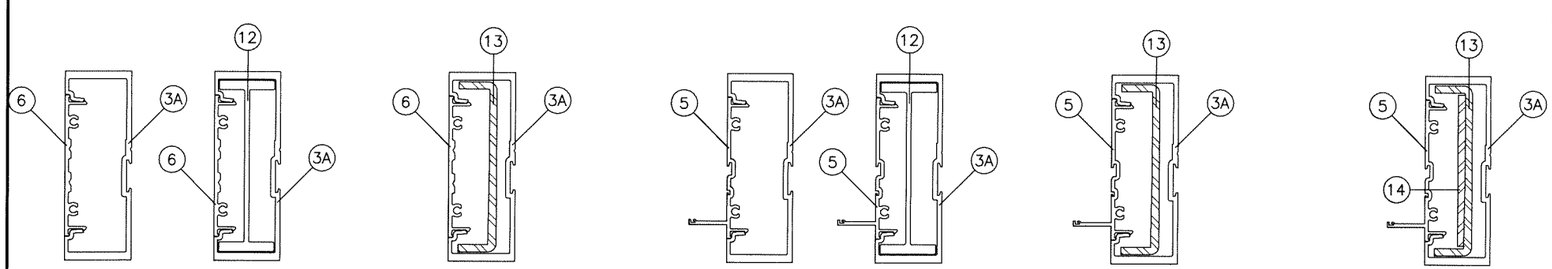

JAMB 'JD1' | JAMB 'JD2' | JAMB 'JD3' | MULLION 'MD1' | MULLION 'MD2' | MULLION 'MD3' | MULLION 'MD4'

Ix IN^4	Sx IN^3
6.570	2.7226

Ix IN^4	Sx IN^3
10.6577	3.8057

	Ix IN^4	Sx IN^3
ALUMINUM	6.570	2.7226
STEEL	2.7506	1.2224
TOTAL Ix ALUM + Ix STL X 2.9	14.5467	

Ix IN^4	Sx IN^3
6.7195	2.6757

Ix IN^4	Sx IN^3
10.8072	4.4788

	Ix IN^4	Sx IN^3
ALUMINUM	6.7195	2.6757
STEEL	2.7506	1.224
TOTAL Ix ALUM + Ix STL X 2.9	14.6962	

	Ix IN^4	Sx IN^3
ALUMINUM	6.7195	2.6757
STEEL	3.7533	1.668
TOTAL Ix ALUM + Ix STL X 2.9	17.6041	

DOOR−WINDOWALL TRANSITION MULLION

Sealed: 4/7/2025

JALAL FAROOQ LICENSE No. 81223 STATE OF FLORIDA PROFESSIONAL ENGINEER

FL #17897

AL-FAROOQ CORPORATION
ENGINEERS & PRODUCT DEVELOPMENT
9360 SUNSET DRIVE, SUITE 220
MIAMI, FLORIDA 33173
TEL. (305) 264-8100
FBPE #3538
WWW.AFCENG.COM

STORE\23-06F-ES

SERIES 8000 ALUMINUM WINDOW WALL SYSTEM (S.M.I.)

E.S. WINDOWS, LLC
3550 N.W. 49 STREET
MIAMI, FL. 33142
TEL. (305) 638-5151 FAX. (305) 638-5158

revisions:

no	date	by	description

date: 01-25-23
scale: –
dr. by: TARIQ
chk. by:

drawing no. 23−06F

DOOR MULLION LOAD CAPACITY - PSF

NOMINAL DIMS.				JAMB 'JD1' MULL 'MD1'	JAMB 'JD1' MULL 'MD2'	JAMB 'JD2' JAMB 'JD3' MULL 'MD3'	JAMB 'JD3' MULL 'MD4'
WIDTH (W1) INCHES	WIDTH (W2) INCHES	FRAME HEIGHT INCHES	DOOR HEIGHT INCHES	EXT.(+) INT.(−)	EXT.(+) INT.(−)	EXT.(+) INT.(−)	EXT.(+) INT.(−)
85-3/4	30	96	84	90.0	90.0	90.0	90.0
	36			90.0	90.0	90.0	90.0
	42			90.0	90.0	90.0	90.0
	48			90.0	90.0	90.0	90.0
	54			90.0	90.0	90.0	90.0
	60			85.7	90.0	90.0	90.0
	30	102		90.0	90.0	90.0	90.0
	36			86.9	90.0	90.0	90.0
	42			81.5	90.0	90.0	90.0
	48			76.7	90.0	90.0	90.0
	54			72.5	90.0	89.0	90.0
	30	108		74.2	90.0	90.0	90.0
	36			69.5	90.0	89.1	90.0
	42			65.4	90.0	84.4	90.0
	48			61.7	90.0	80.2	90.0
	30	114		60.2	90.0	81.7	90.0
	36			56.6	90.0	77.4	90.0
	42			53.3	85.8	73.4	87.8
	48			50.5	81.2	69.9	83.5
	30	120		49.7	80.0	71.9	85.9
	36			46.8	75.3	68.1	81.5
	42			44.2	71.2	64.8	77.4
	48			41.9	67.5	61.7	73.8
85-3/4	30	102	90	90.0	90.0	90.0	90.0
	36			90.0	90.0	90.0	90.0
	42			86.6	90.0	90.0	90.0
	48			81.2	90.0	90.0	90.0
	54			76.5	90.0	90.0	90.0
	30	108		79.3	90.0	90.0	90.0
	36			74.0	90.0	90.0	90.0
	42			69.3	90.0	88.9	90.0
	48			65.2	90.0	84.3	90.0
	30	114		63.9	90.0	85.6	90.0
	36			59.9	90.0	80.8	90.0
	42			56.3	90.0	76.5	90.0
	48			53.1	85.4	72.7	86.9
	30	120		52.4	84.2	74.5	89.1
	36			49.2	79.1	70.5	84.3
	42			46.3	74.5	66.9	80.0
	48			43.8	70.5	63.6	76.1

DOOR MULLION LOAD CAPACITY - PSF

NOMINAL DIMS.				JAMB 'JD1' MULL 'MD1'	JAMB 'JD1' MULL 'MD2'	JAMB 'JD2' JAMB 'JD3' MULL 'MD3'	JAMB 'JD3' MULL 'MD4'
WIDTH (W1) INCHES	WIDTH (W2) INCHES	FRAME HEIGHT INCHES	DOOR HEIGHT INCHES	EXT.(+) INT.(−)	EXT.(+) INT.(−)	EXT.(+) INT.(−)	EXT.(+) INT.(−)
85-3/4	30	108	96	84.6	90.0	90.0	90.0
	36			78.6	90.0	90.0	90.0
	42			73.4	90.0	90.0	90.0
	48			68.8	90.0	89.7	90.0
	30	114		68.2	90.0	90.0	90.0
	36			63.5	90.0	85.3	90.0
	42			59.5	90.0	80.6	90.0
	48			56.0	90.0	76.3	90.0
	30	120		55.5	89.3	78.0	90.0
	36			51.9	83.5	73.6	88.0
	42			48.8	78.5	69.7	83.3
	48			46.0	74.0	66.2	79.1
85-3/4	30	114	102	72.4	90.0	90.0	90.0
	36			67.2	90.0	90.0	90.0
	42			62.7	90.0	85.9	90.0
	48			58.8	90.0	81.1	90.0
	30	120		59.0	90.0	82.6	90.0
	36			55.0	88.4	77.7	90.0
	42			51.5	82.8	73.3	87.7
	48			48.4	77.8	69.4	83.0
85-3/4	30	120	110-1/2	63.7	90.0	90.0	90.0
	36			59.0	90.0	85.7	90.0
	42			55.0	88.4	80.4	90.0
	48			51.5	82.8	75.7	90.0

INTERPOLATION BETWEEN WIDTHS OR HEIGHTS ALLOWED.

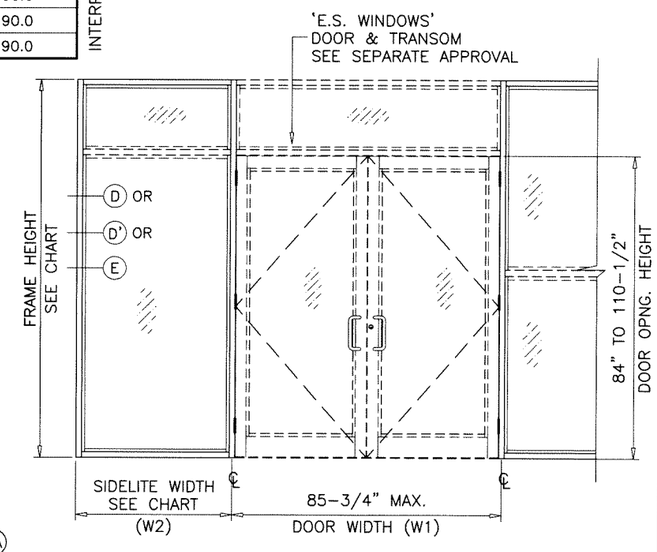

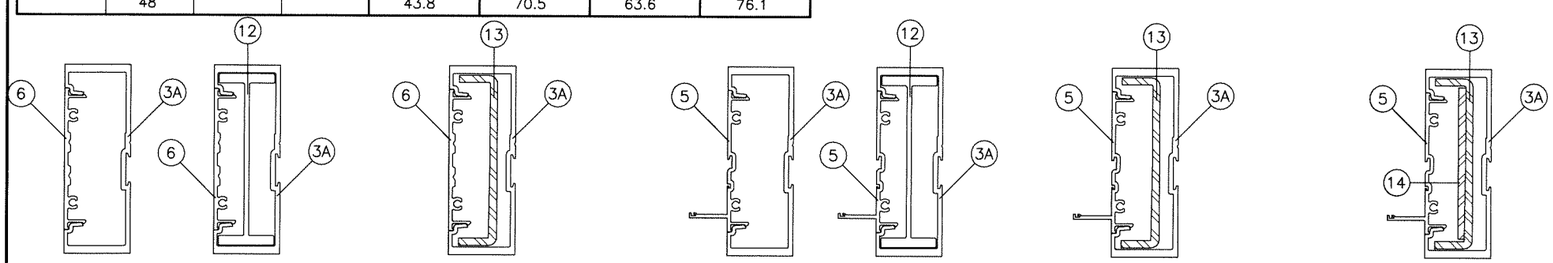

JAMB 'JD1'

Ix IN^4	Sx IN^3
6.570	2.7226

JAMB 'JD2'

Ix IN^4	Sx IN^3
10.6577	3.8057

JAMB 'JD3'

	Ix IN^4	Sx IN^3
ALUMINUM	6.570	2.7226
STEEL	2.7506	1.2224
TOTAL Ix ALUM + Ix STL X 2.9	14.5467	

MULLION 'MD1'

Ix IN^4	Sx IN^3
6.7195	2.6757

MULLION 'MD2'

Ix IN^4	Sx IN^3
10.8072	4.4788

MULLION 'MD3'

	Ix IN^4	Sx IN^3
ALUMINUM	6.7195	2.6757
STEEL	2.7506	1.224
TOTAL Ix ALUM + Ix STL X 2.9	14.6962	

MULLION 'MD4'

	Ix IN^4	Sx IN^3
ALUMINUM	6.7195	2.6757
STEEL	3.7533	1.668
TOTAL Ix ALUM + Ix STL X 2.9	17.6041	

DOOR-WINDOWALL TRANSITION MULLION

Sealed: 4/7/2025

JALAL FAROOQ
LICENSE
No. 81223
STATE OF FLORIDA
PROFESSIONAL ENGINEER

FL #17897

AL-FAROOQ CORPORATION
ENGINEERS & PRODUCT DEVELOPMENT
9360 SUNSET DRIVE, SUITE 220
MIAMI, FLORIDA 33173
TEL. (305) 264-8100
FBPE #3538
WWW.AFCENG.COM

STORE\23-06F-ES

SERIES 8000 ALUMINUM WINDOW WALL SYSTEM (S.M.I.)

E.S. WINDOWS, LLC
3550 N.W. 49 STREET
MIAMI, FL. 33142
TEL. (305) 638-5151 FAX. (305) 638-5158

revisions:

no	date	by	description

date: 01-25-23
scale: -
dr. by: TARIQ
chk. by:

drawing no. 23-06F

DOOR MULLION LOAD CAPACITY – PSF				
NOMINAL DIMS.				JAMB 'JD3' MULL 'MD4'
WIDTH (W1) INCHES	WIDTH (W2) INCHES	FRAME HEIGHT INCHES	DOOR HEIGHT INCHES	EXT.(+) INT.(–)
96	30	96	84	90.0
	36			90.0
	42			90.0
	48			90.0
	54			90.0
	60			90.0
	30	102		90.0
	36			90.0
	42			90.0
	48			90.0
	54			90.0
	30	108		90.0
	36			90.0
	42			90.0
	48			89.4
	30	114		90.0
	36			85.5
	42			81.5
	48			77.8
	30	120		79.1
	36			75.3
	42			71.8
	48			68.7
96	30	102	90	90.0
	36			90.0
	42			90.0
	48			90.0
	54			90.0
	30	108		90.0
	36			90.0
	42			90.0
	48			90.0
	30	114		90.0
	36			89.5
	42			85.1
	48			81.1
	30	120		82.1
	36			78.0
	42			74.3
	48			70.9

DOOR MULLION LOAD CAPACITY – PSF				
NOMINAL DIMS.				JAMB 'JD3' MULL 'MD4'
WIDTH (W1) INCHES	WIDTH (W2) INCHES	FRAME HEIGHT INCHES	DOOR HEIGHT INCHES	EXT.(+) INT.(–)
96	30	108	96	90.0
	36			90.0
	42			90.0
	48			90.0
	30	114		90.0
	36			90.0
	42			89.8
	48			85.3
	30	120		86.1
	36			81.6
	42			77.5
	48			73.9
96	30	114	102	90.0
	36			90.0
	42			90.0
	48			90.0
	30	120		90.0
	36			86.3
	42			81.8
	48			77.7
96	30	120	110–1/2	90.0
	36			90.0
	42			90.0
	48			85.1
96	30	144	108	57.0
	36			54.2
	42			51.6
	48			49.2

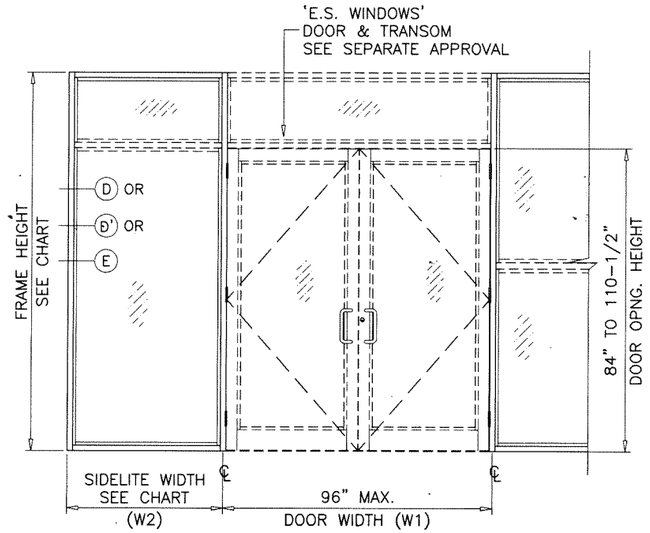

DOOR MULLION LOAD CAPACITY – PSF				
NOMINAL DIMS.				JAMB 'JD3' MULL 'MD5'
WIDTH (W1) INCHES	WIDTH (W2) INCHES	FRAME HEIGHT INCHES	DOOR HEIGHT INCHES	EXT.(+) INT.(–)
76	30	144	108	78.4
	36			73.8
	42			69.7
	48			66.1
84	30			73.1
	36			69.1
	42			65.5
	48			62.3
96	30			66.3
	36			63.0
	42			60.0
	48			57.3

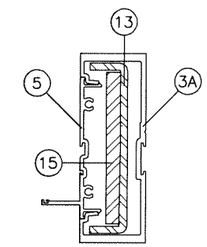

MULLION 'MD5'

	Ix IN^4	Sx IN^3
ALUMINUM	6.7195	2.6757
STEEL	4.7506	2.1114
TOTAL Ix ALUM + Ix STL X 2.9	20.3598	

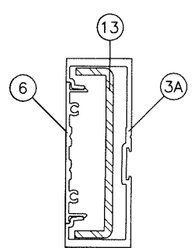

JAMB 'JD3'

	Ix IN^4	Sx IN^3
ALUMINUM	6.570	2.7226
STEEL	2.7506	1.2224
TOTAL Ix ALUM + Ix STL X 2.9	14.5467	

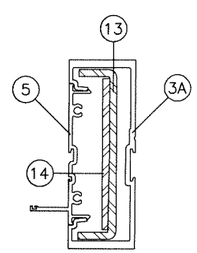

MULLION 'MD4'

	Ix IN^4	Sx IN^3
ALUMINUM	6.7195	2.6757
STEEL	3.7533	1.668
TOTAL Ix ALUM + Ix STL X 2.9	17.6041	

DOOR–WINDOWALL
TRANSITION MULLION

Sealed: 4/7/2025

JALAL FAROOQ
LICENSE
No. 81223
STATE OF FLORIDA
PROFESSIONAL ENGINEER

FL #17897

AL-FAROOQ CORPORATION
ENGINEERS & PRODUCT DEVELOPMENT
9360 SUNSET DRIVE, SUITE 220
MIAMI, FLORIDA 33173
TEL. (305) 264-8100
WWW.AFCENG.COM
FBPE #3538

STORE\23–06F–ES

SERIES 8000 ALUMINUM WINDOW WALL SYSTEM (S.M.I.)

E.S. WINDOWS, LLC
3550 N.W. 49 STREET
MIAMI, FL. 33142
TEL. (305) 638–5151 FAX. (305) 638–5158

revisions:

no	date	by	description

date: 01–25–23
scale: –
dr. by: TARIQ
chk. by:

drawing no.
23–06F

DOOR MULLION HEAD ANCHOR LOAD CAPACITY - PSF						
NOMINAL DIMS.				'C4'	'C5'	'C6'
WIDTH (W1) INCHES	WIDTH (W2) INCHES	FRAME HEIGHT INCHES	DOOR HEIGHT INCHES	EXT.(+) INT.(−)	EXT.(+) INT.(−)	EXT.(+) INT.(−)
85−3/4	30	96	84	89.6	90.0	90.0
	36			85.0	90.0	90.0
	42			80.8	90.0	90.0
	48			77.0	90.0	90.0
	54			73.6	90.0	90.0
	60			70.4	88.0	90.0
	30	102		86.0	90.0	90.0
	36			81.5	90.0	90.0
	42			77.4	90.0	90.0
	48			73.8	90.0	90.0
	54			70.4	88.0	90.0
	30	108		82.7	90.0	90.0
	36			78.3	90.0	90.0
	42			74.3	90.0	90.0
	48			70.8	88.4	90.0
	30	114		79.7	90.0	90.0
	36			75.4	90.0	90.0
	42			71.5	89.4	90.0
	48			68.0	85.0	90.0
	30	120		76.9	90.0	90.0
	36			72.6	90.0	90.0
	42			68.9	86.1	90.0
	48			65.4	81.8	90.0
85−3/4	30	102	90	84.1	90.0	90.0
	36			79.7	90.0	90.0
	42			75.8	90.0	90.0
	48			72.3	90.0	90.0
	54			69.1	86.4	90.0
	30	108		80.9	90.0	90.0
	36			76.7	90.0	90.0
	42			72.9	90.0	90.0
	48			69.4	86.8	90.0
	30	114		78.0	90.0	90.0
	36			73.9	90.0	90.0
	42			70.1	87.7	90.0
	48			66.8	83.5	90.0
	30	120		75.3	90.0	90.0
	36			71.2	89.1	90.0
	42			67.6	84.5	90.0
	48			64.3	80.4	90.0

DOOR MULLION HEAD ANCHOR LOAD CAPACITY - PSF						
NOMINAL DIMS.				'C4'	'C5'	'C6'
WIDTH (W1) INCHES	WIDTH (W2) INCHES	FRAME HEIGHT INCHES	DOOR HEIGHT INCHES	EXT.(+) INT.(−)	EXT.(+) INT.(−)	EXT.(+) INT.(−)
85−3/4	30	108	96	79.2	90.0	90.0
	36			75.1	90.0	90.0
	42			71.5	89.3	90.0
	48			68.1	85.2	90.0
	30	114		76.4	90.0	90.0
	36			72.4	90.0	90.0
	42			68.8	86.0	90.0
	48			65.6	82.0	90.0
	30	120		73.8	90.0	90.0
	36			69.9	87.4	90.0
	42			66.4	83.0	90.0
	48			63.2	79.0	90.0
85−3/4	30	114	102	74.9	90.0	90.0
	36			71.0	88.8	90.0
	42			67.6	84.5	90.0
	48			64.4	80.5	90.0
	30	120		72.4	90.0	90.0
	36			68.6	85.7	90.0
	42			65.2	81.5	90.0
	48			62.1	77.7	90.0
85−3/4	30	120	110−1/2	70.4	88.0	90.0
	36			66.8	83.5	90.0
	42			63.6	79.5	90.0
	48			60.7	75.9	90.0

INTERPOLATION BETWEEN WIDTHS OR HEIGHTS ALLOWED.

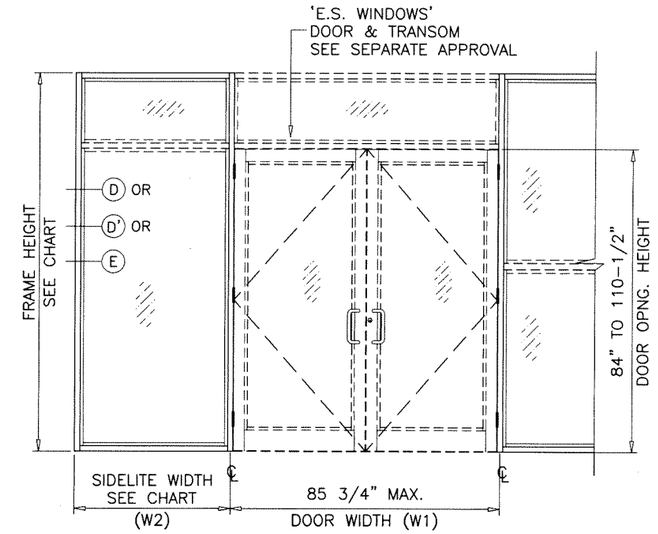

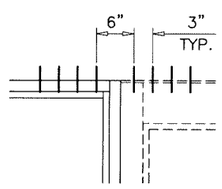

'C4'

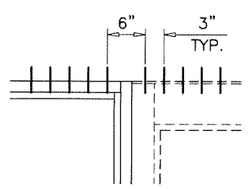

'C5'

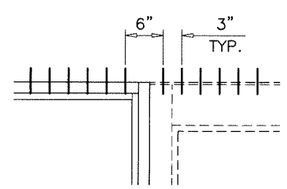

'C6'

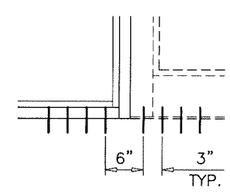

'C4' AT SILL ALL CASES

ANCHORS TYPES: SEE SHEET 13 FOR DESCRIPTION

C4 = (4) ANCHORS TYPE 'C' AT EACH SIDE OF DOOR MULLION

C5 = (5) ANCHORS TYPE 'C' AT EACH SIDE OF DOOR MULLION

C6 = (6) ANCHORS TYPE 'C' AT EACH SIDE OF DOOR MULLION

ALL OTHER ANCHORS TO BE SPACED AS PER ELEVATION.

TRANSITION MULLION ANCHORS

Sealed: 4/7/2025

JALAL FAROOQ LICENSE No. 81223 STATE OF FLORIDA PROFESSIONAL ENGINEER

FL #17897

AL-FAROOQ CORPORATION
ENGINEERS & PRODUCT DEVELOPMENT
9360 SUNSET DRIVE, SUITE 220
MIAMI, FLORIDA 33173
TEL. (305) 264-8100
FBPE #3538
WWW.AFCENG.COM

STORE\23-06F-ES

SERIES 8000 ALUMINUM WINDOW WALL SYSTEM (S.M.I.)

E.S. WINDOWS, LLC
3550 N.W. 49 STREET
MIAMI, FL. 33142
TEL. (305) 638-5151 FAX. (305) 638-5158

revisions:

no	date	by	description

date: 01-25-23
scale: -
dr. by: TARIQ
chk. by:

drawing no. 23-06F

DOOR MULLION HEAD ANCHOR LOAD CAPACITY - PSF						
NOMINAL DIMS.				'C4'	'C5'	'C6'
WIDTH (W1) INCHES	WIDTH (W2) INCHES	FRAME HEIGHT INCHES	DOOR HEIGHT INCHES	EXT.(+) INT.(−)	EXT.(+) INT.(−)	EXT.(+) INT.(−)
96	30	96	84	82.4	90.0	90.0
	36			78.5	90.0	90.0
	42			74.9	90.0	90.0
	48			71.7	89.6	90.0
	54			68.7	85.8	90.0
	60			65.9	82.4	90.0
	30	102		79.2	90.0	90.0
	36			75.3	90.0	90.0
	42			71.8	89.8	90.0
	48			68.7	85.8	90.0
	54			65.8	82.2	90.0
	30	108		76.2	90.0	90.0
	36			72.4	90.0	90.0
	42			69.0	86.3	90.0
	48			65.9	82.4	90.0
	30	114		73.4	90.0	90.0
	36			69.8	87.2	90.0
	42			66.4	83.0	90.0
	48			63.4	79.2	90.0
	30	120		70.9	88.6	90.0
	36			67.3	84.1	90.0
	42			64.0	80.0	90.0
	48			61.0	76.3	90.0
96	30	102	90	77.3	90.0	90.0
	36			73.7	90.0	90.0
	42			70.3	87.9	90.0
	48			67.3	84.1	90.0
	54			64.5	80.6	90.0
	30	108		74.5	90.0	90.0
	36			70.9	88.6	90.0
	42			67.6	84.5	90.0
	48			64.6	80.8	90.0
	30	114		71.8	89.8	90.0
	36			68.3	85.4	90.0
	42			65.1	81.4	90.0
	48			62.2	77.7	90.0
	30	120		69.4	86.7	90.0
	36			65.9	82.4	90.0
	42			62.8	78.5	90.0
	48			59.9	74.9	89.9

DOOR MULLION HEAD ANCHOR LOAD CAPACITY - PSF						
NOMINAL DIMS.				'C4'	'C5'	'C6'
WIDTH (W1) INCHES	WIDTH (W2) INCHES	FRAME HEIGHT INCHES	DOOR HEIGHT INCHES	EXT.(+) INT.(−)	EXT.(+) INT.(−)	EXT.(+) INT.(−)
96	30	108	96	72.8	90.0	90.0
	36			69.4	86.7	90.0
	42			66.3	82.8	90.0
	48			63.4	79.2	90.0
	30	114		70.3	87.9	90.0
	36			66.9	83.7	90.0
	42			63.8	79.8	90.0
	48			61.0	76.3	90.0
	30	120		68.0	84.9	90.0
	36			64.6	80.8	90.0
	42			61.6	77.0	90.0
	48			58.9	73.6	88.3
96	30	114	102	68.8	86.1	90.0
	36			65.6	82.0	90.0
	42			62.6	78.3	90.0
	48			59.9	74.9	89.9
	30	120		66.6	83.2	90.0
	36			63.4	79.2	90.0
	42			60.5	75.6	90.0
	48			57.8	72.3	86.7
96	30	120	110−1/2	64.7	80.9	90.0
	36			61.7	77.1	90.0
	42			58.9	73.7	88.4
	48			56.4	70.5	84.6
96	30	144	108	57.8	72.3	86.7
	36			54.9	68.7	82.4
	42			52.3	65.4	78.5
	48			49.9	62.4	74.9

INTERPOLATION BETWEEN WIDTHS OR HEIGHTS ALLOWED.

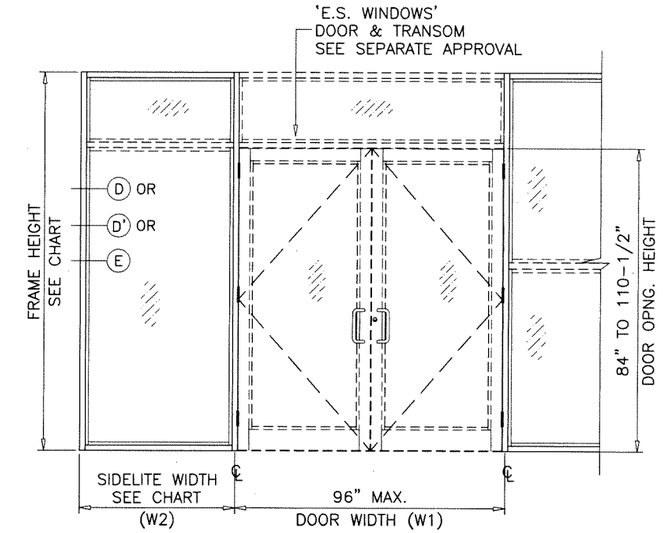

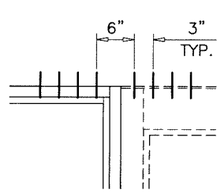

'C4'

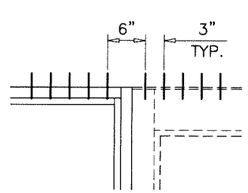

'C5'

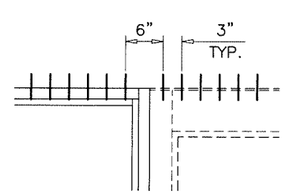

'C6'

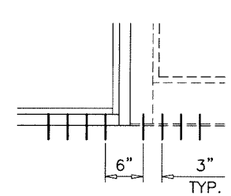

'C4' AT SILL ALL CASES

ANCHORS TYPES: SEE SHEET 13 FOR DESCRIPTION

C4 = (4) ANCHORS TYPE 'C' AT EACH SIDE OF DOOR MULLION

C5 = (5) ANCHORS TYPE 'C' AT EACH SIDE OF DOOR MULLION

C6 = (6) ANCHORS TYPE 'C' AT EACH SIDE OF DOOR MULLION

ALL OTHER ANCHORS TO BE SPACED AS PER ELEVATION.

TRANSITION MULLION ANCHORS

Sealed: 4/7/2025

JALAL FAROOQ LICENSE No. 81223 STATE OF FLORIDA PROFESSIONAL ENGINEER

FL #17897

AL-FAROOQ CORPORATION
ENGINEERS & PRODUCT DEVELOPMENT
9360 SUNSET DRIVE, SUITE 220
MIAMI, FLORIDA 33173
TEL. (305) 264-8100
FBPE #3538
WWW.AFCENG.COM

STORE\23-06F-ES

SERIES 8000 ALUMINUM WINDOW WALL SYSTEM (S.M.I.)

E.S. WINDOWS, LLC
3550 N.W. 49 STREET
MIAMI, FL. 33142
TEL. (305) 638-5151 FAX. (305) 638-5158

revisions:			
no	date	by	description

date: 01-25-23
scale: -
dr. by: TARIQ
chk. by:

drawing no. 23-06F

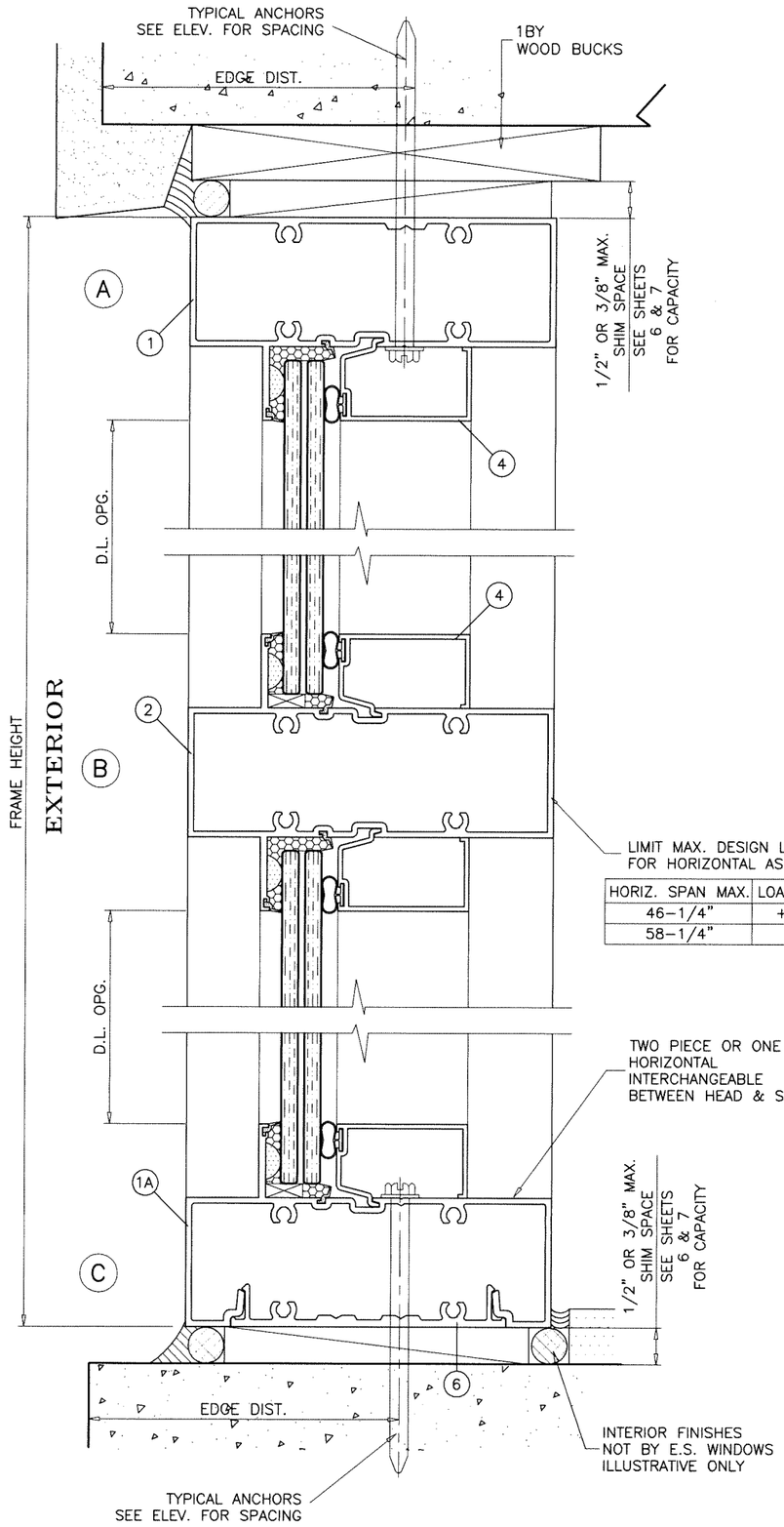

LIMIT MAX. DESIGN LOADS
FOR HORIZONTAL AS FOLLOWS

HORIZ. SPAN MAX.	LOAD CAPACITY – PSF
46–1/4"	+100.0, –130.0
58–1/4"	+70.0, –70.0

TWO PIECE OR ONE PIECE
HORIZONTAL
INTERCHANGEABLE
BETWEEN HEAD & SILL

INTERIOR FINISHES
NOT BY E.S. WINDOWS
ILLUSTRATIVE ONLY

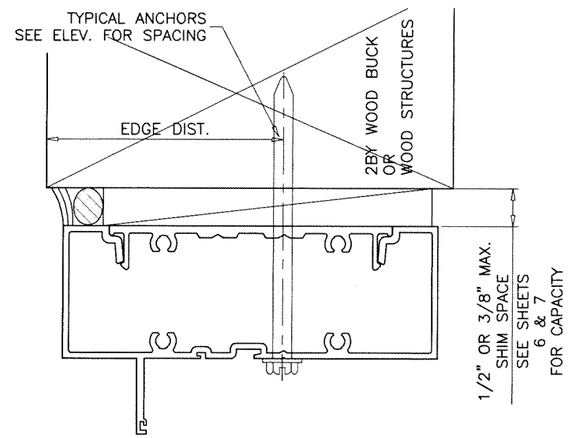

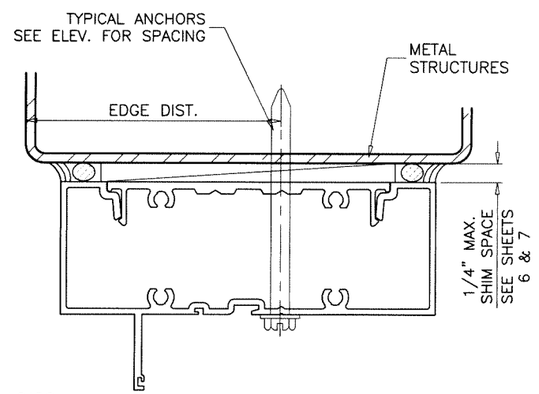

TYPICAL ANCHORS: SEE ELEV. FOR SPACING

TYPE 'A'– **1/4" DIA. ULTRACON+ BY 'DEWALT'** (Fu=164 KSI, Fy=148 KSI)

INTO 2BY WOOD BUCKS OR WOOD STRUCTURES
WITH 1–1/2" MIN. PENETRATION INTO WOOD

THRU 1BY WOOD BUCKS INTO CONCRETE
WITH 1–1/4" MIN. EMBED INTO CONCRETE

DIRECTLY INTO CONCRETE
WITH 2" MIN. EMBED INTO CONC.

ANCHOR EDGE DISTANCES

INTO CONCRETE AND MASONRY = 2–1/2" MIN.
INTO WOOD STRUCTURE = 1" MIN.

TYPE 'B'– **1/4" DIA. KWIK–CON II+ BY 'HILTI'** (Fu=138 KSI, Fy=137 KSI)

INTO 2BY WOOD BUCKS OR WOOD STRUCTURES
WITH 1–1/2" MIN. PENETRATION INTO WOOD

THRU 1BY WOOD BUCKS INTO CONCRETE
WITH 1–1/4" MIN. EMBED INTO CONCRETE

DIRECTLY INTO CONCRETE
WITH 2" MIN. EMBED INTO CONC.

ANCHOR EDGE DISTANCES

INTO CONCRETE AND MASONRY = 3" MIN.
INTO WOOD STRUCTURE = 1" MIN.

TYPE 'C'– **5/16" DIA ULTRACON BY 'DEWALT'** (Fu=177 KSI, Fy=155 KSI)

INTO 2BY WOOD BUCKS OR WOOD STRUCTURES
WITH 1–1/2" MIN. PENETRATION INTO WOOD

THRU 1BY WOOD BUCKS INTO CONCRETE
WITH 1–1/4" MIN. EMBED INTO CONCRETE

DIRECTLY INTO CONCRETE
WITH 1–1/4" MIN. EMBED INTO CONC.

ANCHOR EDGE DISTANCES

INTO CONCRETE AND MASONRY = 3" MIN.
INTO WOOD STRUCTURE = 1–1/4" MIN.

TYPE 'D'– **1/4" DIA. TEKS OR SELF DRILLING SCREWS ST/ST** (GRADE 5 CRS)

INTO METAL STRUCTURES
(3) THREADS MIN. PENETRATION BEYOND SUBSTRATE
ALUMINUM: 1/8" THK. MIN. (6063–T5 MIN.)
STEEL: 1/8" THK. MIN. (Fy = 36 KSI MIN.)
(STEEL IN CONTACT WITH ALUMINUM TO BE PLATED OR PAINTED)

ANCHOR EDGE DISTANCES

INTO METAL STRUCTURE = 1/2" MIN.

WOOD AT HEAD, SILL OR JAMBS SG = 0.55 MIN.
CONCRETE AT HEAD, SILL OR JAMBS f'c = 3000 PSI MIN.
C–90 HOLLOW/FILLED BLOCK AT JAMBS f'm = 2000 PSI MIN.

Sealed: 4/7/2025

SEALANTS:

ALL FRAME CORNERS, JOINTS, MULLION SEAMS AND PERIMETER OF GLAZING BEAD TO FRAME SEALED WITH SILICONE SEALANT.

WOOD BUCKS AND METAL STRUCTURES NOT BY 'E.S. WDW.' MUST SUPPORT LOADS IMPOSED BY GLAZING SYSTEM AND TRANSFER THEM TO THE BUILDING STRUCTURE.

JALAL FAROOQ
LICENSE
No. 81223
STATE OF FLORIDA
PROFESSIONAL ENGINEER

FL #17897

AL-FAROOQ CORPORATION
ENGINEERS & PRODUCT DEVELOPMENT
9360 SUNSET DRIVE, SUITE 220
MIAMI, FLORIDA 33173
TEL. (305) 264-8100
FBPE #3538
WWW.AFCENG.COM

STORE\23-06F-ES

SERIES 8000 ALUMINUM WINDOW WALL SYSTEM (S.M.I.)

E.S. WINDOWS, LLC
3550 N.W. 49 STREET
MIAMI, FL. 33142
TEL. (305) 638-5151 FAX. (305) 638-5158

revisions:

no	date	by	description

date: 01-25-23
scale: 1/2" = 1"
dr. by: TARIQ
chk. by:

drawing no. 23-06F

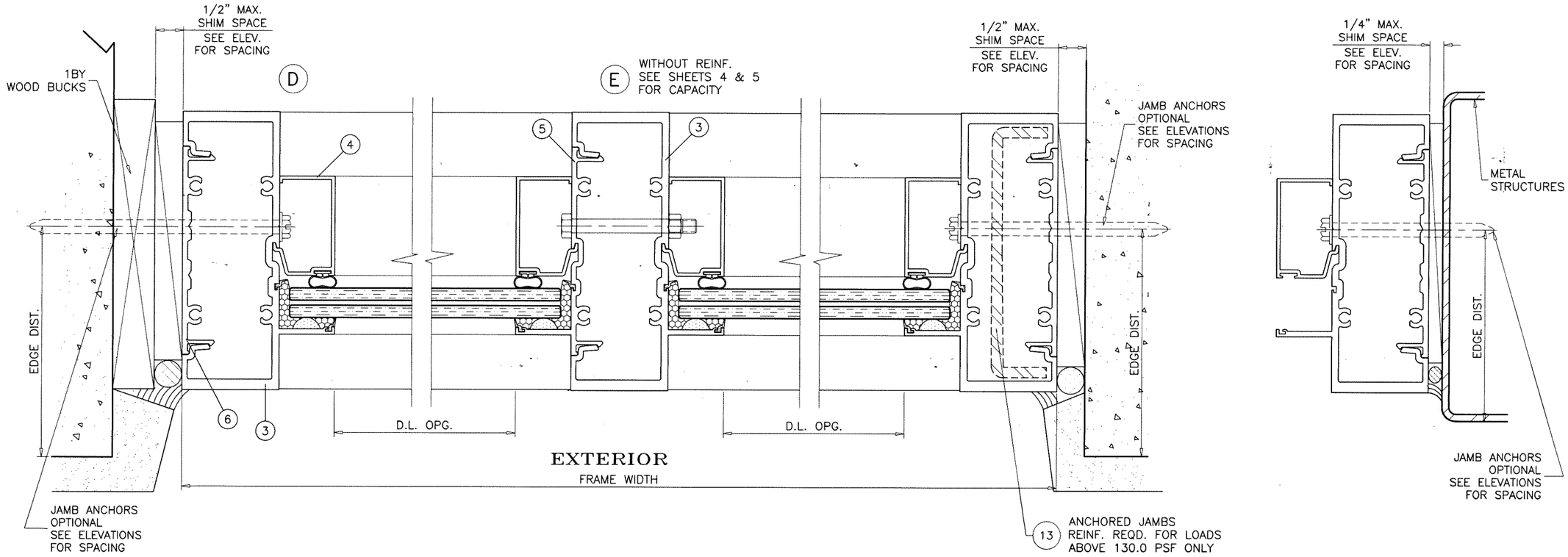

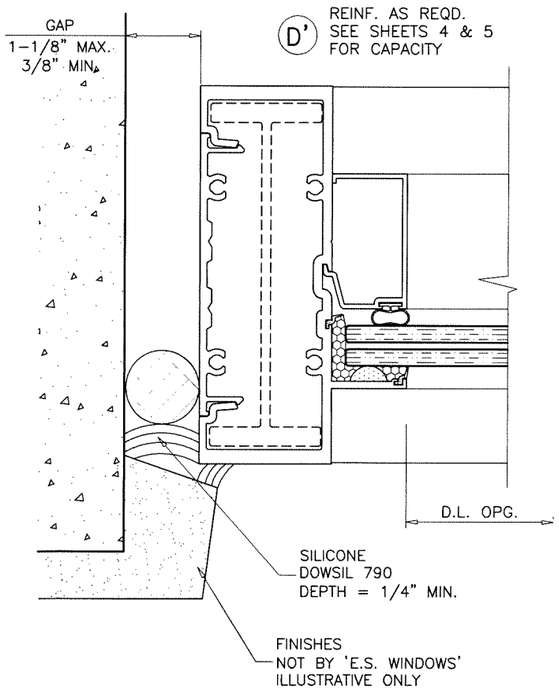

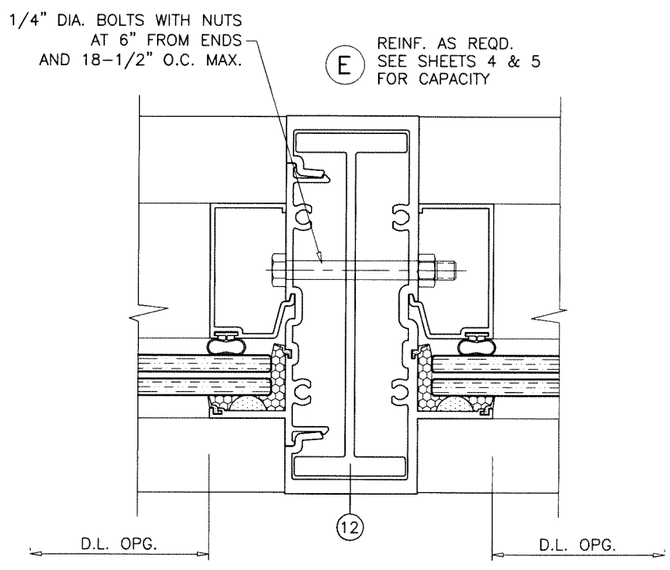

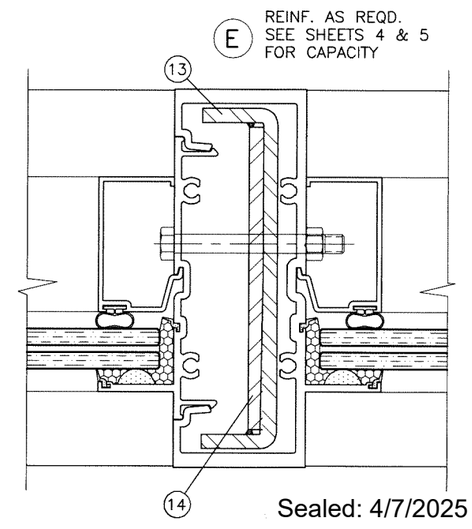

Sealed: 4/7/2025

JALAL FAROOQ
LICENSE
No. 81223
STATE OF FLORIDA
PROFESSIONAL ENGINEER

FL #17897

AL-FAROOQ CORPORATION
ENGINEERS & PRODUCT DEVELOPMENT
9360 SUNSET DRIVE, SUITE 220
MIAMI, FLORIDA 33173
TEL. (305) 264-8100
WWW.AFCENG.COM
FBPE #3538

STORE\23-06F-ES

SERIES 8000 ALUMINUM WINDOW WALL SYSTEM (S.M.I.)

E.S. WINDOWS, LLC
3550 N.W. 49 STREET
MIAMI, FL. 33142
TEL. (305) 638-5151 FAX. (305) 638-5158

revisions:

no	date	by	description

date: 01-25-23
scale: 1/2" = 1"
dr. by: TARIQ
chk. by:

drawing no.
23-06F

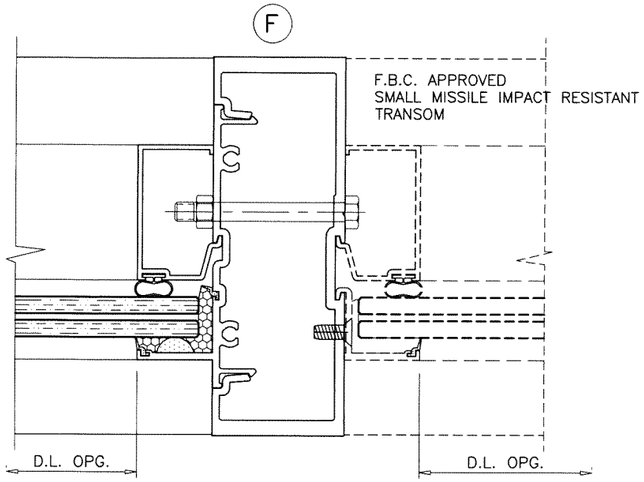

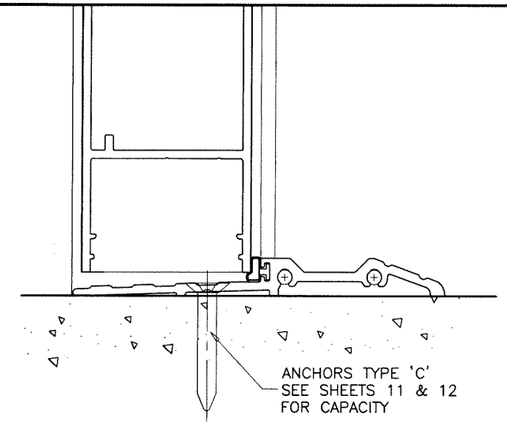

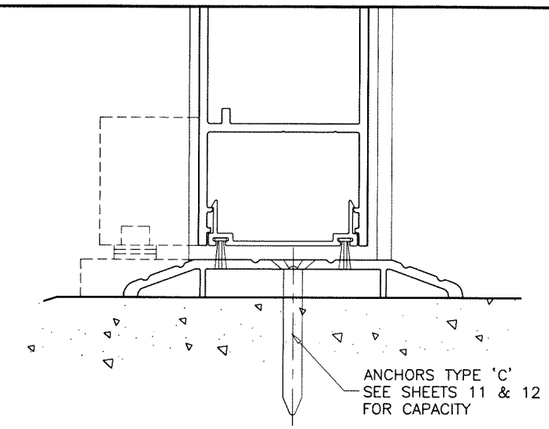

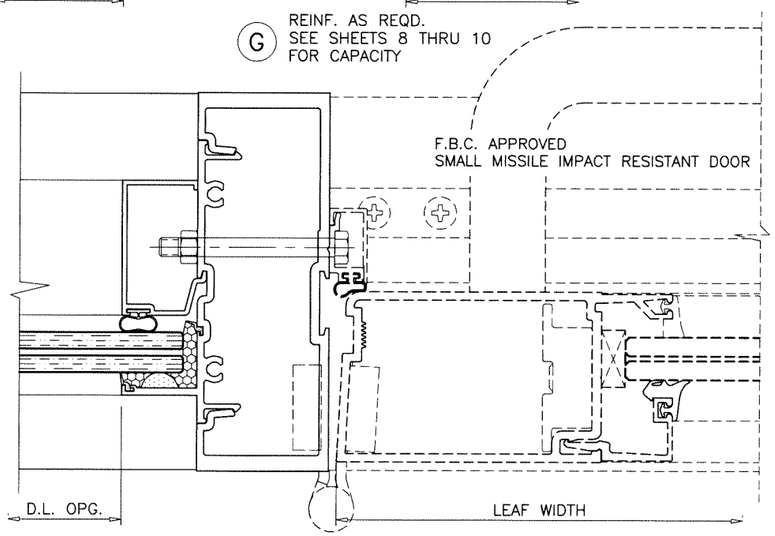

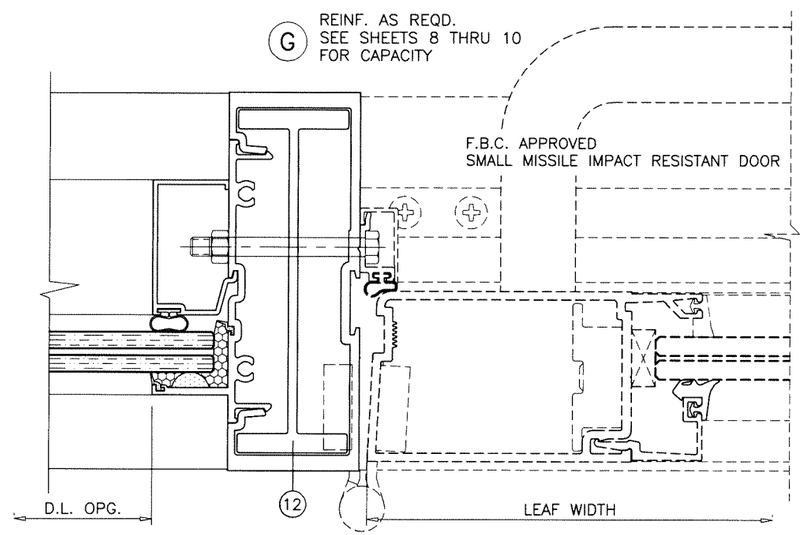

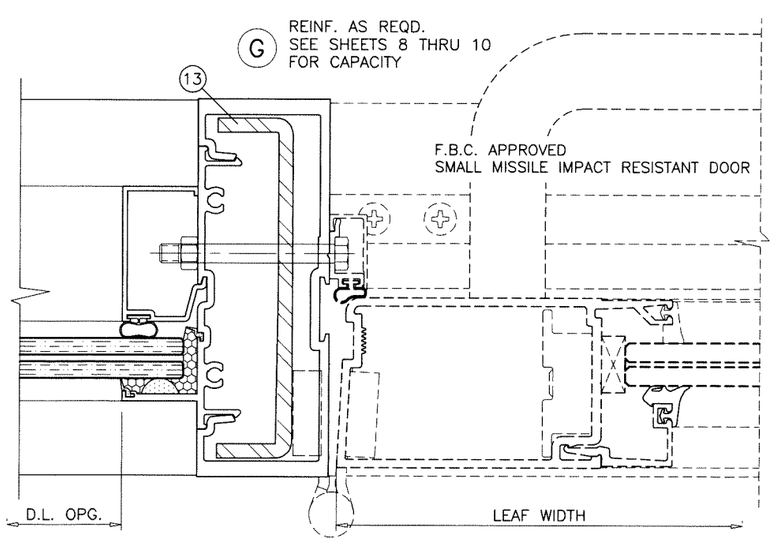

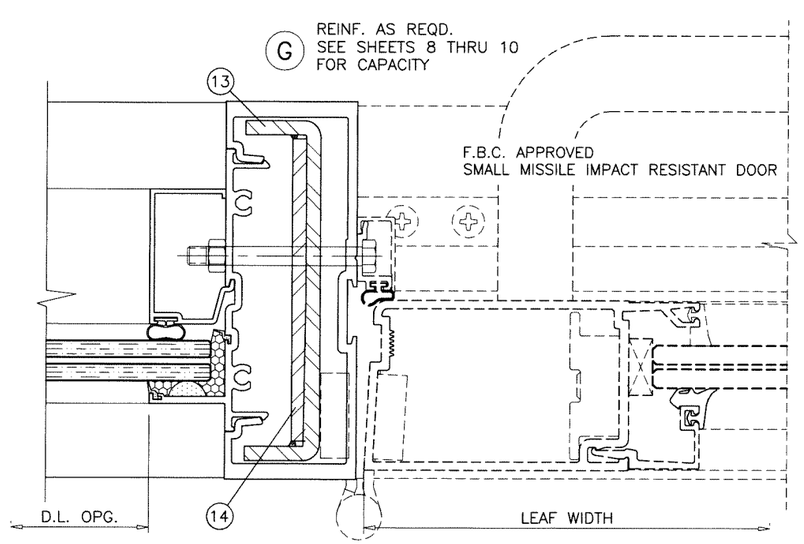

SEE SEPARATE APPROVAL FOR DESIGN LOAD CAPACITY OF DOORS AND DOOR ANCHORS.

LOWER VALUES FROM DOORS APPROVAL OR WINDOW WALL SYSTEM CAPACITY CHARTS WILL APPLY TO ENTIRE SYSTEM.

Sealed: 4/7/2025

FL #17897

JALAL FAROOQ
LICENSE
No. 81223
STATE OF FLORIDA
PROFESSIONAL ENGINEER

AL-FAROOQ CORPORATION
ENGINEERS & PRODUCT DEVELOPMENT
9360 SUNSET DRIVE, SUITE 220
MIAMI, FLORIDA 33173
TEL. (305) 264-8100
WWW.AFCENG.COM
FBPE #3538

STORE\23-06F-ES

SERIES 8000 ALUMINUM WINDOW WALL SYSTEM (S.M.I.)

E.S. WINDOWS, LLC
3550 N.W. 49 STREET
MIAMI, FL. 33142
TEL. (305) 638-5151 FAX. (305) 638-5158

revisions:

no	date	by	description

date: 01-25-23
scale: 1/2" = 1"
dr. by: TARIQ
chk. by:

drawing no. 23-06F

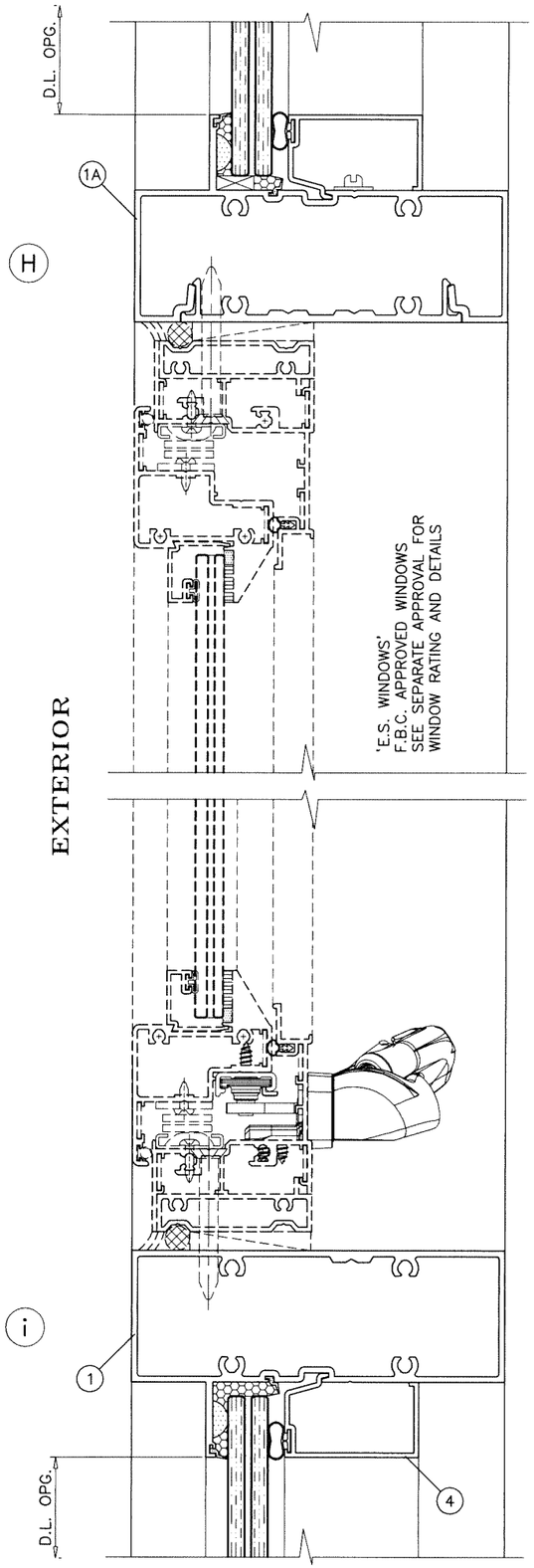

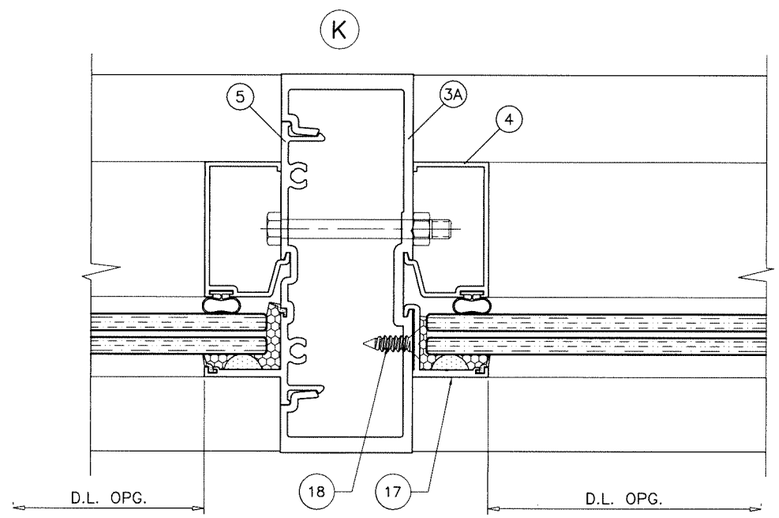

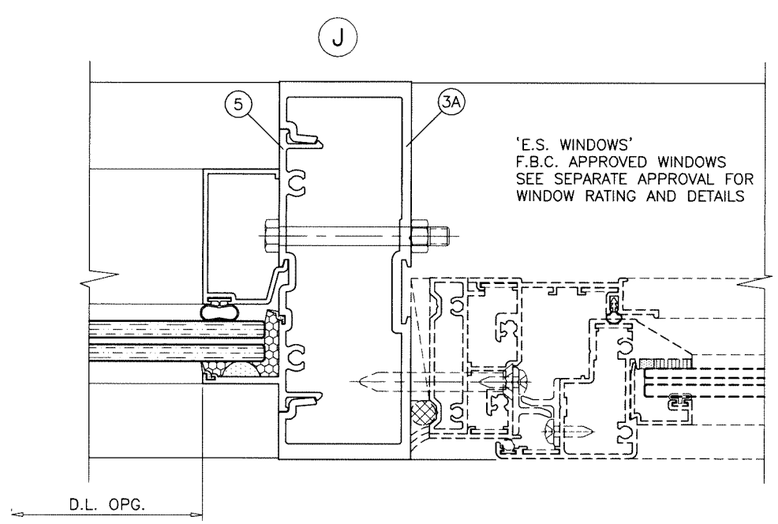

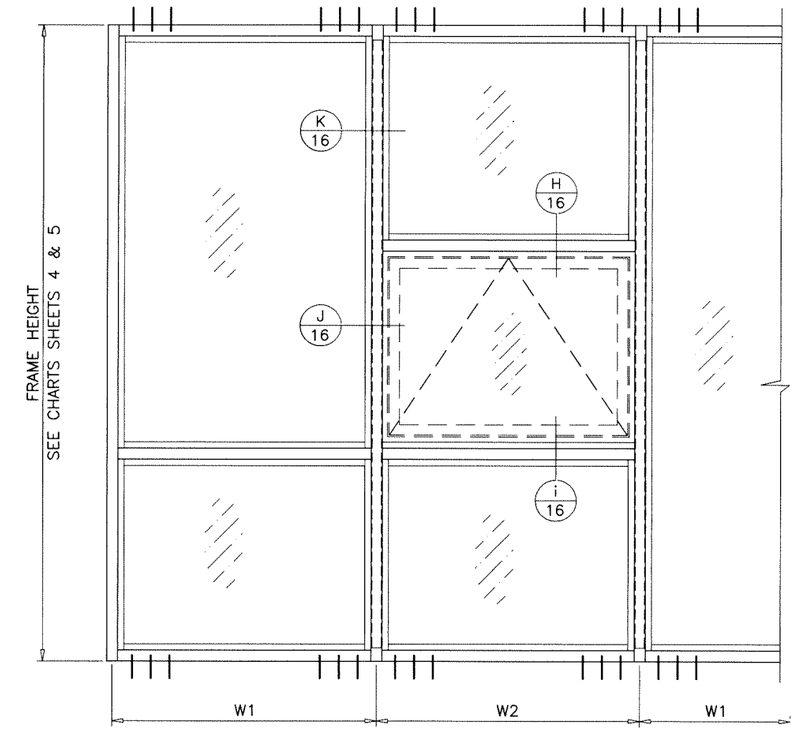

TYPICAL INSTALLATION OF WINDOWS IN THE WINDOW WALL SYSTEM

USE WINDOWS HOLDING CURRENT APPROVAL
REFER TO NOTES ON SHEET 2

$$\text{WIDTH (W)} = \frac{W1 + W2}{2}$$

AT FRAME MULLION

Sealed: 4/7/2025

JALAL FAROOQ
LICENSE
No. 81223
STATE OF FLORIDA
PROFESSIONAL ENGINEER

FL #17897

AL-FAROOQ CORPORATION
ENGINEERS & PRODUCT DEVELOPMENT
9360 SUNSET DRIVE, SUITE 220
MIAMI, FLORIDA 33173
TEL. (305) 264-8100
WWW.AFCENG.COM
FBPE #3538

STORE\23-06F-ES

SERIES 8000 ALUMINUM WINDOW WALL SYSTEM (S.M.I.)

E.S. WINDOWS, LLC
3550 N.W. 49 STREET
MIAMI, FL. 33142
TEL. (305) 638-5151 FAX. (305) 638-5158

revisions:

no	date	by	description

date: 01-25-23
scale: 1/2" = 1"
dr. by: TARIQ
chk. by:

drawing no.
23-06F

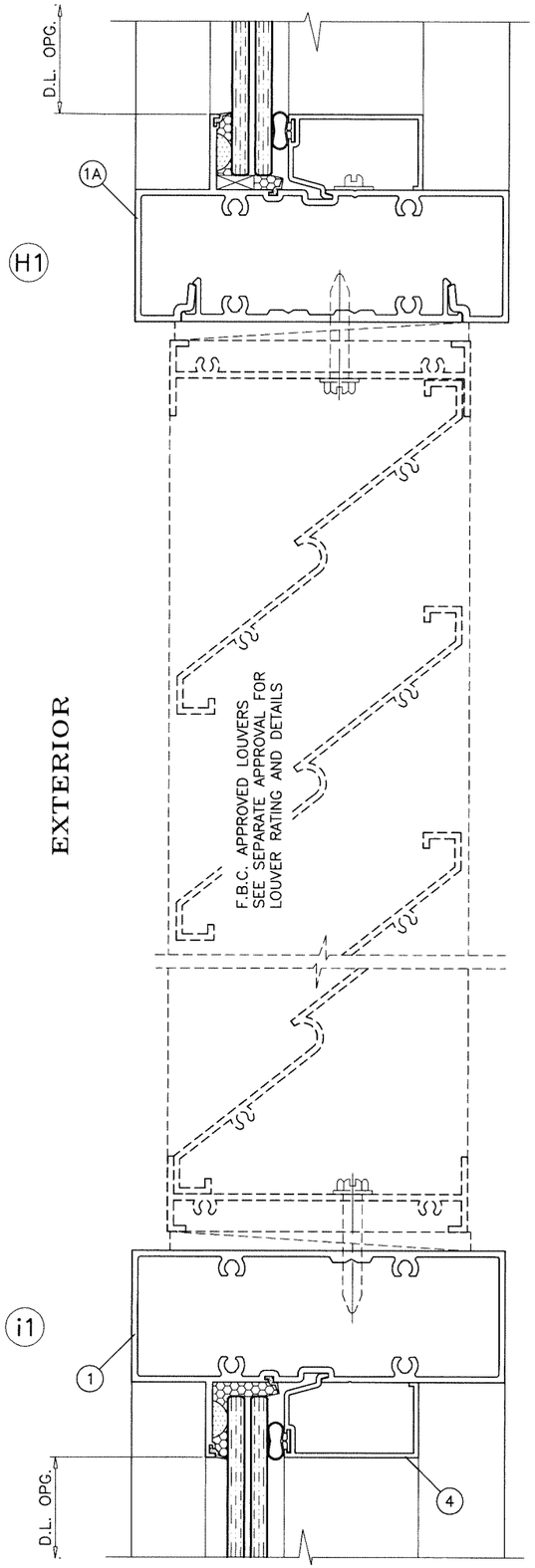

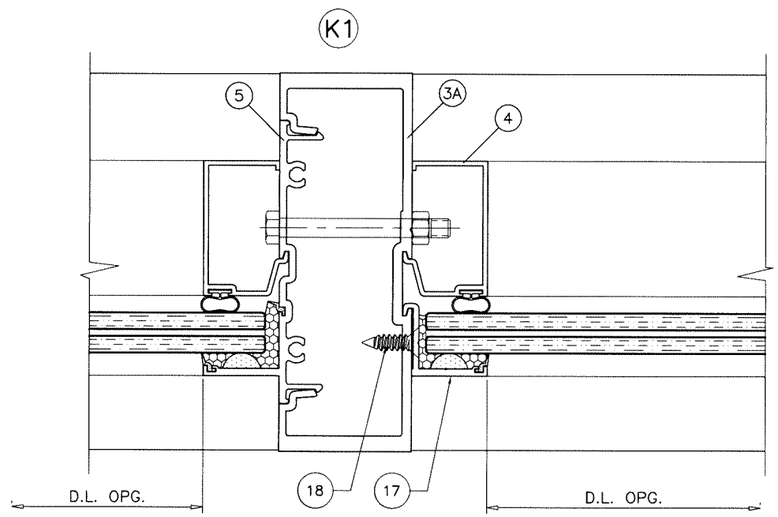

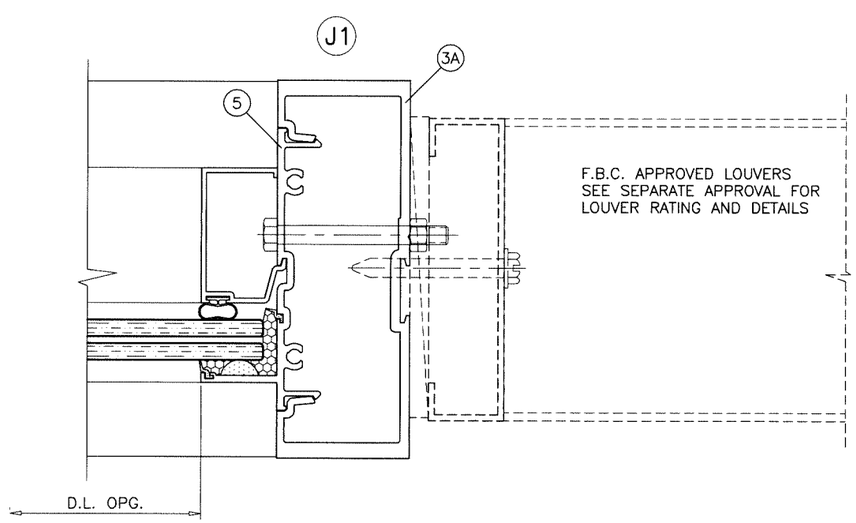

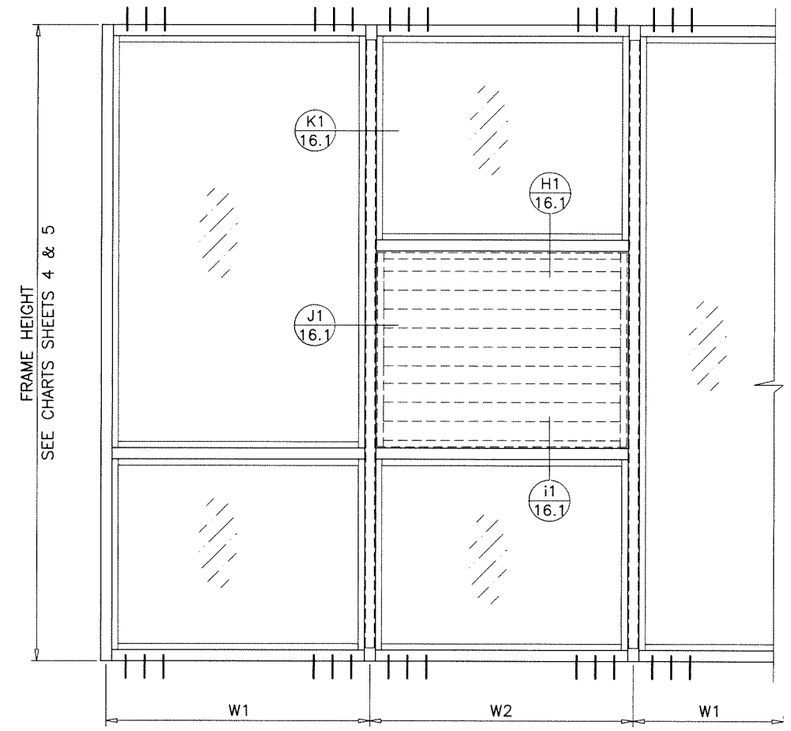

TYPICAL INSTALLATION OF LOUVERS IN THE WINDOW WALL SYSTEM

USE LOUVERS HOLDING CURRENT APPROVAL
REFER TO NOTES ON SHEET 2

$$\text{WIDTH (W)} = \frac{W1 + W2}{2}$$

AT FRAME MULLION

Sealed: 4/7/2025

JALAL FAROOQ
LICENSE
No. 81223
STATE OF FLORIDA
PROFESSIONAL ENGINEER

FL #17897

AL-FAROOQ CORPORATION
ENGINEERS & PRODUCT DEVELOPMENT
9360 SUNSET DRIVE, SUITE 220
MIAMI, FLORIDA 33173
TEL. (305) 264-8100
WWW.AFCENG.COM
FBPE #3538
STORE\23-06F-ES

SERIES 8000 ALUMINUM WINDOW WALL SYSTEM (S.M.I.)

E.S. WINDOWS, LLC
3550 N.W. 49 STREET
MIAMI, FL. 33142
TEL. (305) 638-5151 FAX. (305) 638-5158

revisions:

no	date	by	description

date: 01-25-23
scale: 1/2" = 1"
dr. by: TARIQ
chk. by:

drawing no. 23-06F

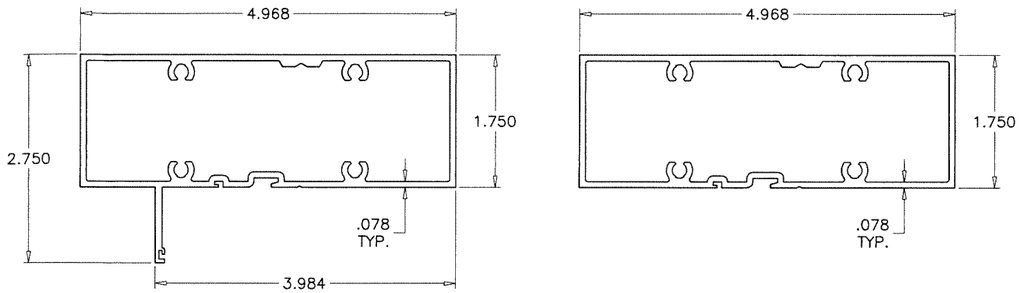

1 HOLLOW FRAME HEAD/SILL 1.1

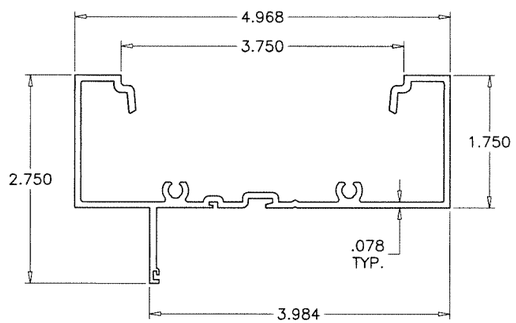

1A FRAME HEAD/SILL/JAMB

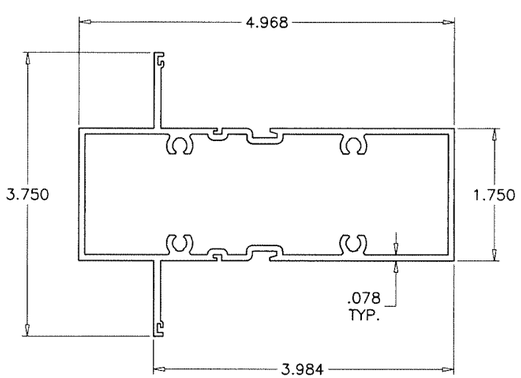

2 INTERMEDIATE HORIZONTAL

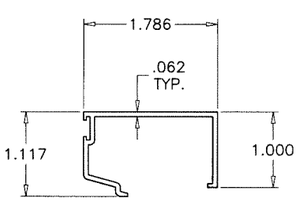

4 GLASS STOP

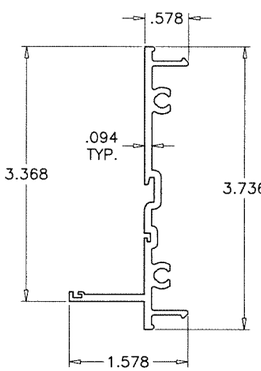

5 MULLION SNAP-IN MATE

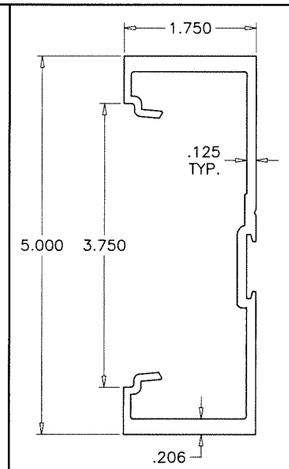

3A FRAME JAMB/MULLION DOOR MULLION

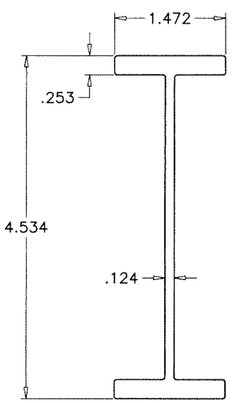

12 STIFFENER

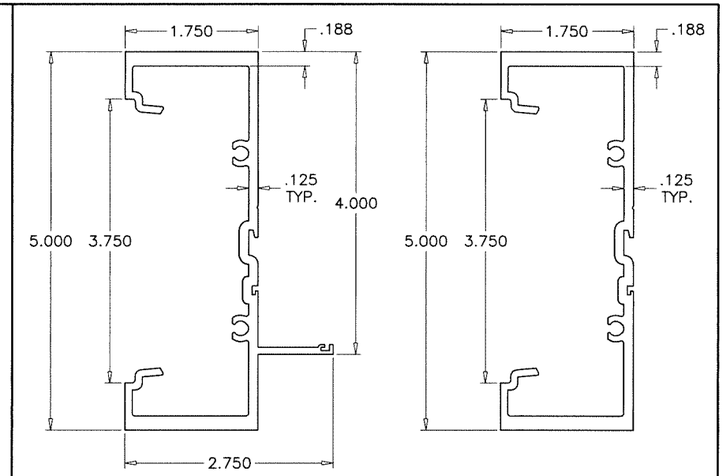

3 FRAME JAMB/MULLION 3.1

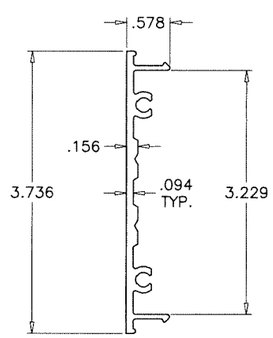

6 SHEAR CLIP

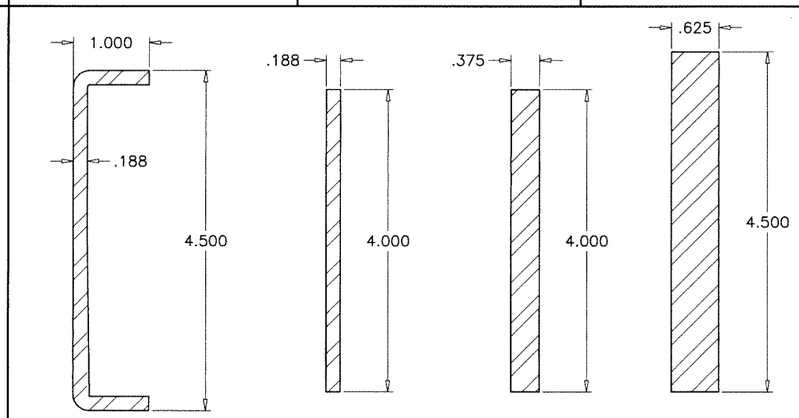

13 14 15 16 STEEL REINFORCING

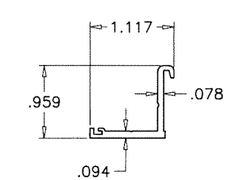

17 EXT. GLAZING ADAPTER

ITEM NO.	PART NUMBER	QUANTITY	DESCRIPTION	MATERIAL	MANF./SUPPLIER/REMARKS
1, 1.1	ES8005	AS REQD.	HOLLOW FRAME HEAD/SILL	6005-T5	–
1A	ES8007	AS REQD.	FRAME HEAD/SILL/JAMB	6063-T6	–
2	ES8004	AS REQD.	INTERMEDIATE HORIZONTAL	6063-T6	–
3, 3.1	ES8001	AS REQD.	FRAME JAMB/MULLION	6005-T5	–
3A	ES8012	AS REQD.	FRAME JAMB/MULLION, DOOR MULLION	6005-T5	–
4	ES8006	AS REQD.	GLASS STOP	6063-T5	–
5	ES8002	AS REQD.	MULLION SNAP-IN MATE	6005-T5	–
6	ES8003	AS REQD.	SHEAR CLIP	6005-T5	–
7	ES8010A	AS REQD.	INTERIOR BULB GASKET	SILICONE	DUROMETER 70±3 SHORE A
8	ES8009	AS REQD.	SILICONE STOP	VINYL	–
8A	ES-8011A	AS REQD.	1/4" BUTTON BUMPER SPACER	SILICONE	DUROMETER 85±5 SHORE A
9	–	–	FRAME JAMB/MULLION	–	–
10	ES-9000-B01A S	2/ LITE	3/16" X 1/2" X 2" LONG SETTING BLOCK, AT 1/4" POINTS	EPDM	DUROMETER 85±5 SHORE A
11	#12 X 1-1/2"	4/ CORNER	ASSEMBLY SCREWS PHSMS	STEEL	–
12	–	AS REQD.	MULLION STIFFENER	6005-T5	–
13	–	AS REQD.	MULLION REINFORCING CHANNEL	STEEL	Fy MIN. = 36 KSI
14	–	AS REQD.	MULLION REINFORCING BAR (3/16" X 4")	STEEL	Fy MIN. = 36 KSI
15	–	AS REQD.	MULLION REINFORCING BAR (3/8" X 4")	STEEL	Fy MIN. = 36 KSI
16	–	AS REQD.	MULLION REINFORCING BAR (5/8" X 4-1/2")	STEEL	Fy MIN. = 70 KSI
17	ES8014	AS REQD.	EXTERIOR GLAZING ADAPTER	6063-T6	–
18	#12 X 3/4"	AS REQD.	ADAPTER FASTENERS, AT 3" FROM ENDS & 12" O.C.	ST. STEEL	FH SMS

Sealed: 4/7/2025

JALAL FAROOQ LICENSE No. 81223 STATE OF FLORIDA PROFESSIONAL ENGINEER

FL #17897

AL-FAROOQ CORPORATION
ENGINEERS & PRODUCT DEVELOPMENT
9360 SUNSET DRIVE, SUITE 220
MIAMI, FLORIDA 33173
TEL. (305) 264-8100
WWW.AFCENG.COM
FBPE #3538

STORE\23-06F-ES

SERIES 8000 ALUMINUM WINDOW WALL SYSTEM (S.M.I.)

E.S. WINDOWS, LLC
3550 N.W. 49 STREET
MIAMI, FL. 33142
TEL. (305) 638-5151 FAX. (305) 638-5158

revisions:

no	date	by	description

date: 01-25-23
scale: 1/2" = 1"
dr. by: TARIQ
chk. by:

drawing no. 23-06F

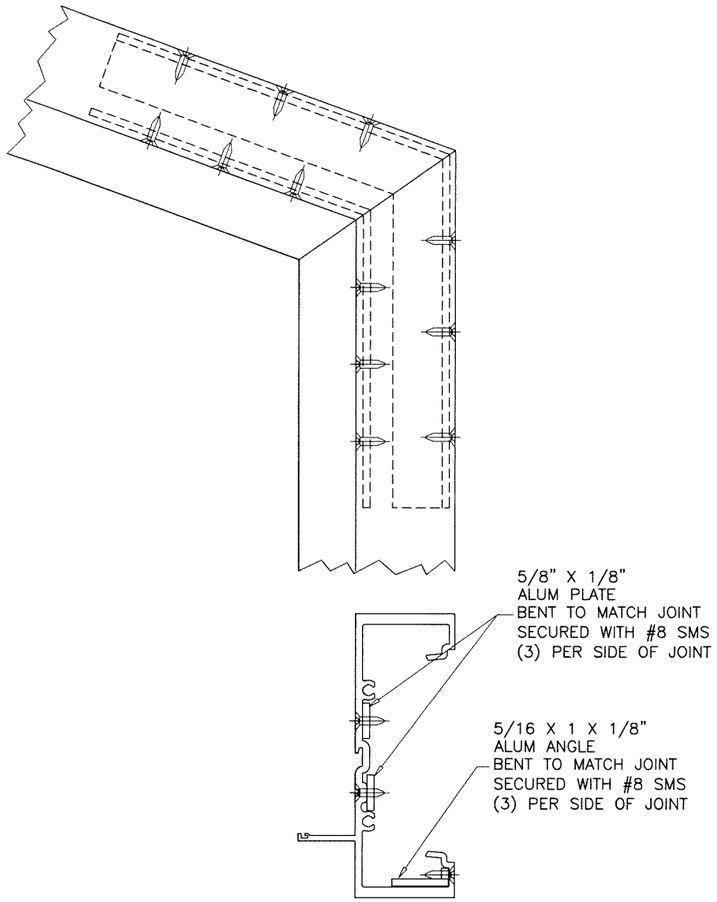

CIRCULAR OR ANGLED CORNERS

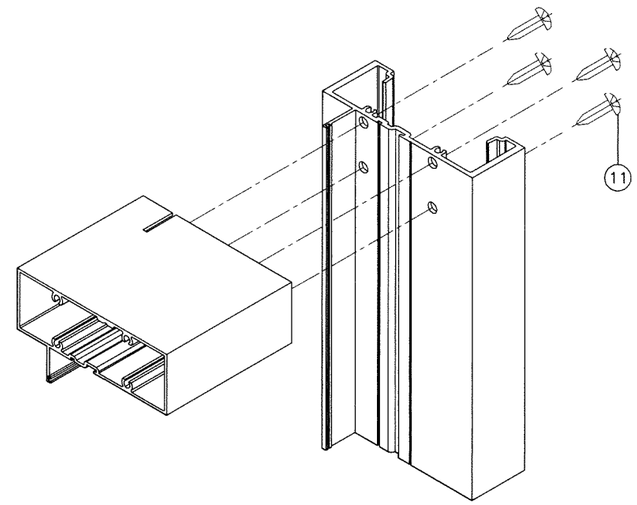

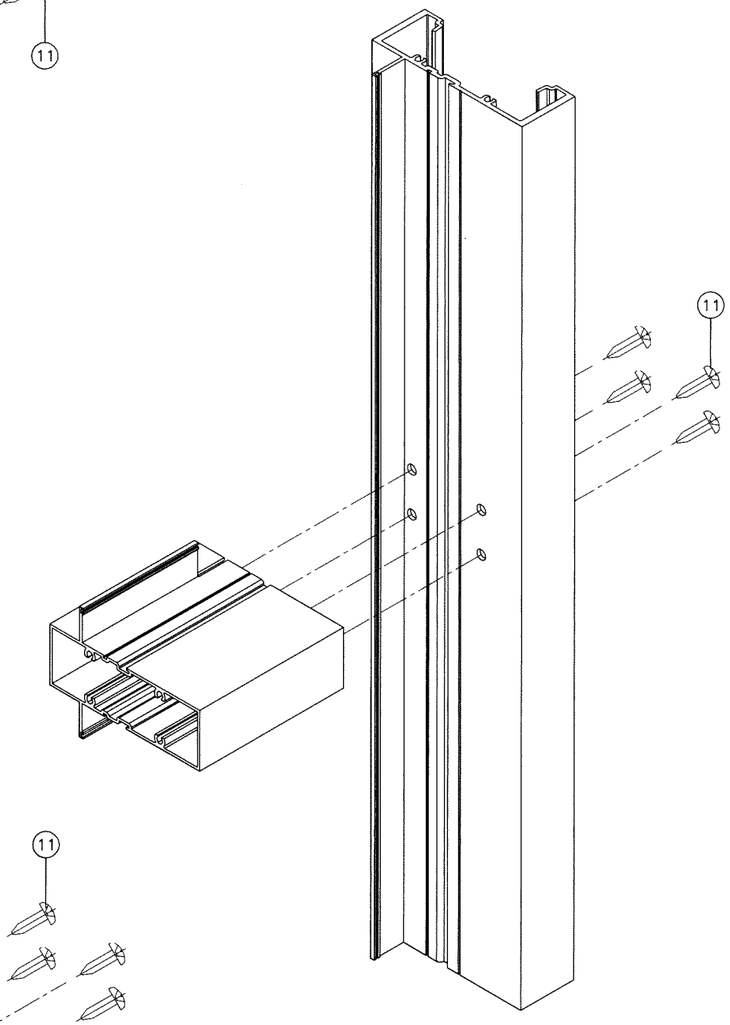

HORIZONTAL CORNER

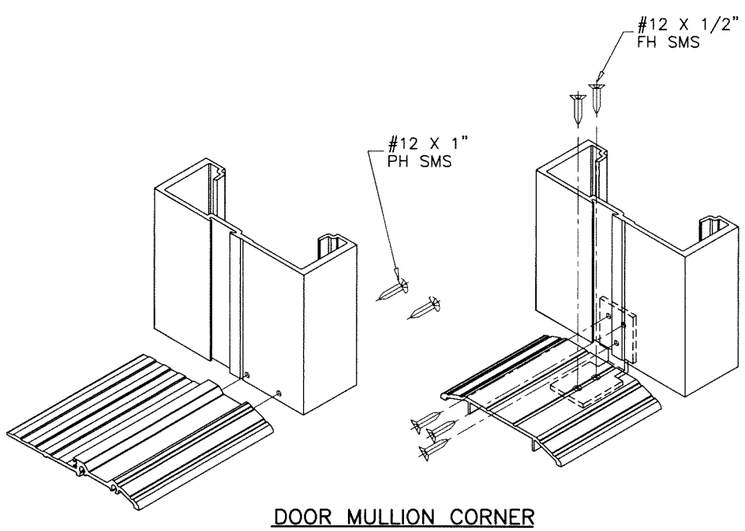

DOOR MULLION CORNER

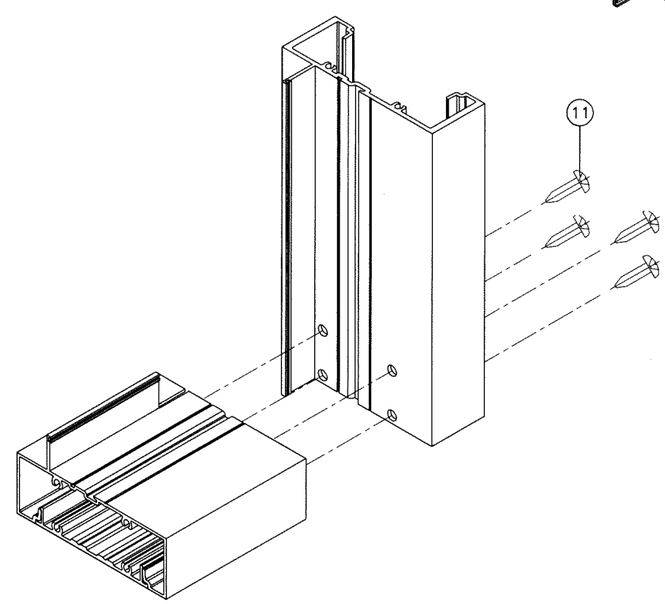

RECT. OR SQUARE CORNERS

Sealed: 4/7/2025

JALAL FAROOQ
LICENSE
No. 81223
STATE OF FLORIDA
PROFESSIONAL ENGINEER

FL #17897

AL-FAROOQ CORPORATION
ENGINEERS & PRODUCT DEVELOPMENT
9360 SUNSET DRIVE, SUITE 220
MIAMI, FLORIDA 33173
TEL. (305) 264-8100
WWW.AFCENG.COM
FBPE #3538

STORE\23-06F-ES

SERIES 8000 ALUMINUM WINDOW WALL SYSTEM (S.M.I.)

E.S. WINDOWS, LLC
3550 N.W. 49 STREET
MIAMI, FL. 33142
TEL. (305) 638-5151 FAX. (305) 638-5158

revisions:

no.	date	by	description

date: 01-25-23
scale: -
dr. by: TARIQ
chk. by:

drawing no. 23-06F