Product Approval
USER: Public User

FL #	FL41740-R1
Application Type	Revision
Code Version	2023
Application Status	Approved
Comments	
Archived	☐
Product Manufacturer	Eco Window Systems
Address/Phone/Email	8502 NW 80th Street Suite 103 Medley, FL 33166 (305) 885-5299 jrosowski@pgtindustries.com
Authorized Signature	Jens Rosowski jrosowski@pgtindustries.com
Technical Representative	Lynn Miller, P.E.
Address/Phone/Email	1070 Technology Dr N Venice, FL 34275 (941) 486-0100 Ext 21142 lmiller@pgtindustries.com
Quality Assurance Representative	
Address/Phone/Email	
Category	Windows
Subcategory	Mullions
Compliance Method	Evaluation Report from a Florida Registered Architect or a Licensed Florida Professional Engineer ☐ Evaluation Report - Hardcopy Received
Florida Engineer or Architect Name who developed the Evaluation Report	A. Lynn Miller, P.E.
Florida License	PE-58705
Quality Assurance Entity	Keystone Certifications, Inc.
Quality Assurance Contract Expiration Date	12/31/2032
Validated By	Steven M. Urich, PE ☑ Validation Checklist - Hardcopy Received
Certificate of Independence	FL41740_R1_COI_Cert of Independence.pdf

Referenced Standard and Year (of Standard)

Standard	Year
TAS 201, 202 & 203	1994

Equivalence of Product Standards Certified By

Sections from the Code

Product Approval Method	Method 1 Option D
Date Submitted	10/19/2023
Date Validated	10/19/2023
Date Pending FBC Approval	10/27/2023
Date Approved	12/13/2023

Summary of Products

FL #	Model, Number or Name	Description
41740.1	Eco-Guard Clipped Aluminum Tube Mullion	Aluminum Tube Mullion
Limits of Use **Approved for use in HVHZ:** Yes **Approved for use outside HVHZ:** Yes **Impact Resistant:** Yes **Design Pressure:** N/A **Other:** Please see the enclosed documents for product performance information, anchorage details, and anchor type, size, and spacing information.		**Installation Instructions** FL41740_R1_II_MULLION - FPA REV A.pdf Verified By: A. Lynn Miller, P.E. PE-58705 Created by Independent Third Party: No **Evaluation Reports** FL41740_R1_AE_Tube Mullion - Eng Eval REV A.pdf Created by Independent Third Party: No

Back Next

Contact Us :: 2601 Blair Stone Road, Tallahassee FL 32399 Phone: 850-487-1824

The State of Florida is an AA/EEO employer. Copyright 2007-2013 State of Florida. :: Privacy Statement :: Accessibility Statement :: Refund Statement

Under Florida law, email addresses are public records. If you do not want your e-mail address released in response to a public-records request, do not send electronic mail to this entity. Instead, contact the office by phone or by traditional mail. If you have any questions, please contact 850.487.1395. *Pursuant to Section 455.275(1), Florida Statutes, effective October 1, 2012, licensees licensed under Chapter 455, F.S. must provide the Department with an email address if they have one. The emails provided may be used for official communication with the licensee. However email addresses are public record. If you do not wish to supply a personal address, please provide the Department with an email address which can be made available to the public. To determine if you are a licensee under Chapter 455, F.S., please click here .

Product Approval Accepts:

Credit Card Safe securityMETRICS

FLORIDA PRODUCT APPROVAL #41740

MULLION SYSTEM IS RATED FOR LARGE MISSILE IMPACT.
AND CAN BE USED WITH ALL FLORIDA PRODUCT APPROVED
IMPACT AND NO–IMPACT RESISTANT PRODUCTS.

RECTANGULAR ALUMINUM TUBE MULLIONS USING MULLION PROPERTIES ONLY

NOTES:

THIS PRODUCT HAS BEEN DESIGNED AND TESTED TO COMPLY WITH THE REQUIREMENTS OF THE FLORIDA BUILDING CODE INCLUDING HIGH VELOCITY HURRICANE ZONE (HVHZ).

ALL GLAZING PRODUCTS USED WITH THESE MULLIONS MUST MEET THE APPLICABLE BUILDING CODE REQUIREMENTS I.E.: WIND LOADS, WATER FILTRATION, FORCED ENTRY RESISTANCE, SAFEGUARDS, ETC.

1BY OR 2BY WOOD BUCKS & BUCK FASTENERS BY OTHERS, MUST BE DESIGNED AND INSTALLED ADEQUATELY TO TRANSFER APPLIED PRODUCT LOADS TO THE BUILDING STRUCTURE.

ANCHORS SHALL BE CORROSION RESISTANT, SPACED AS SHOWN ON DETAILS AND INSTALLED PER MANUF'S INSTRUCTIONS. SPECIFIED EMBEDMENT TO BASE MATERIAL SHALL BE BEYOND WALL DRESSING OR STUCCO.

A LOAD DURATION INCREASE IS USED IN DESIGN OF ANCHORS INTO WOOD ONLY.

ALL SHIMS TO BE HIGH IMPACT, NON–METALLIC AND NON–COMPRESSIBLE.

MATERIALS INCLUDING BUT NOT LIMITED TO STEEL/METAL SCREWS, THAT COME INTO CONTACT WITH OTHER DISSIMILAR MATERIALS SHALL MEET THE REQUIREMENTS OF THE FLORIDA BLDG. CODE & ADOPTED STANDARDS.

THIS PRODUCT APPROVAL IS GENERIC AND DOES NOT PROVIDE INFORMATION FOR A SITE SPECIFIC PROJECT, i.e. LIFE SAFETY OF THIS PRODUCT, ADEQUACY OF STRUCTURE RECEIVING THIS PRODUCT AND SEALING AROUND OPENING FOR WATER INFILTRATION RESISTANCE ETC.
CONDITIONS NOT SHOWN IN THIS DRAWING ARE TO BE ANALYZED SEPARATELY, AND TO BE REVIEWED BY BUILDING OFFICIAL.

DESIGN LOAD SHOWN ARE BASED ON 'ALLOWABLE STRESS DESIGN (ASD)'.

INSTRUCTIONS:

USE CHARTS AND GRAPHS AS FOLLOW.

STEP 1 DETERMINE DESIGN LOADS REQUIRED PER ASCE 7 FOR PARTICULAR OPENING.

STEP 2 USE FPA APPROVED GLAZING PRODUCTS MEETING ABOVE LOAD REQUIREMENTS.

STEP 3 USE CONNECTION TO MULLION AS PER PRODUCT APPROVAL.

STEP 4 USING CHARTS ON SHEET 3 SELECT MULLION SIZE WITH DESIGN RATING MORE THAN DESIGN LOAD SPECIFIED IN STEP 1 ABOVE.

STEP 5 USING ANCHOR TYPE ON SHEET 5 THRU 9 AND ANCHOR CHARTS ON SHEET 4, SELECT ANCHOR TYPE WITH DESIGN RATING MORE THAN THE DESIGN LOADS SPECIFIED IN STEP 1 ABOVE.

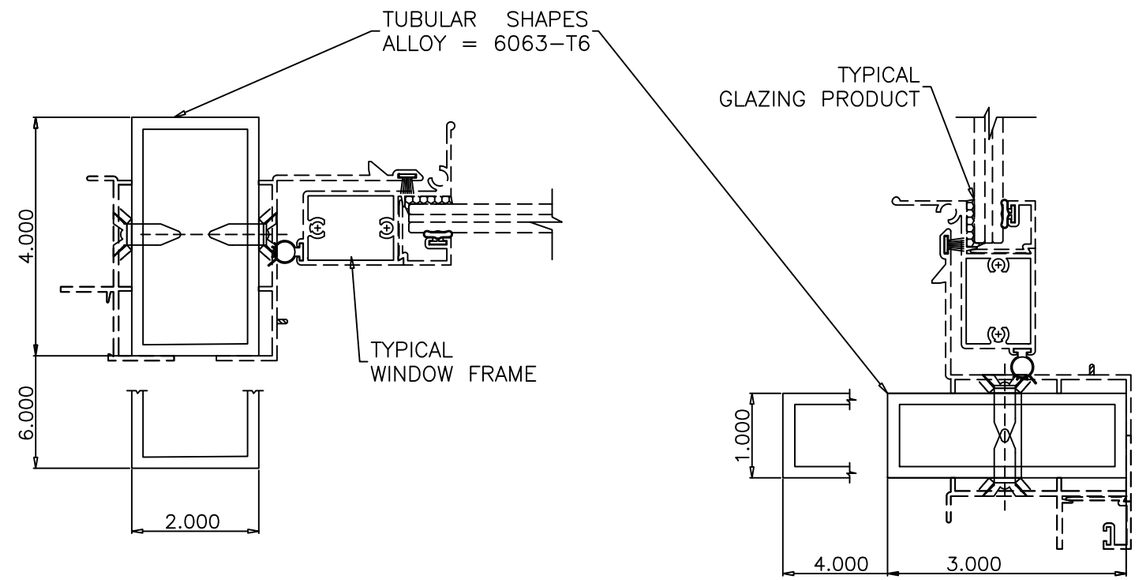

MULLIONS CONTAINING TYPICAL GLAZING PRODUCTS HORIZONTAL OR VERTICAL

SEE WINDOW OR DOOR APPROVAL FOR FASTENERS SIZES AND SPACING.

Revision:
REVISED TABLE FORMAT AND ADDED DP TABLE ROUNDING NOTE

PREPARED BY A. LYNN MILLER
1070 TECHNOLOGY DRIVE
N. VENICE, FL 34275
(941) 480-1600
REGISTRATION #29296

ECO window systems
ECO WINDOW SYSTEMS, LLC.
8502 N.W. 80th ST. MEDLEY, FL 33166
TEL. (305) 885-5299 FAX. (305) 885-5902

Title: ALUMINUM TUBE MULLIUONS
Desc.: GENERAL INFORMATION, NOTES & INSTRUCTIONS
Drawn By: A. M.
Date: 9/27/2022
Series: MULLION
Sheet: 1 OF 9
DWG No.: MULLION-FPA
Rev.: A

ANTHONY LYNN MILLER
LICENSE
No. 58705
10/17/23
STATE OF
FLORIDA
PROFESSIONAL ENGINEER

A. LYNN MILLER, P.E.
P.E.# 58705

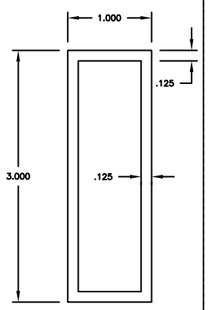

1 X 3
STD. MULLION
6063–T6

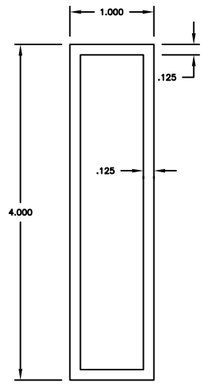

1 X 4
STD. MULLION
6063–T6

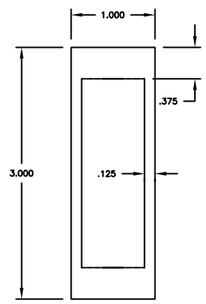

1 X 3
CUSTOM MULLION
6063–T6

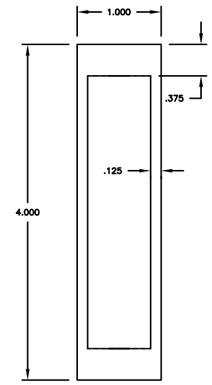

1 X 4
CUSTOM MULLION
6063–T6

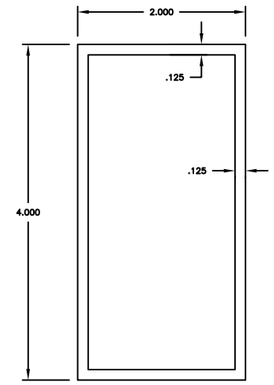

2 X 4
STD. MULLION
6063–T6

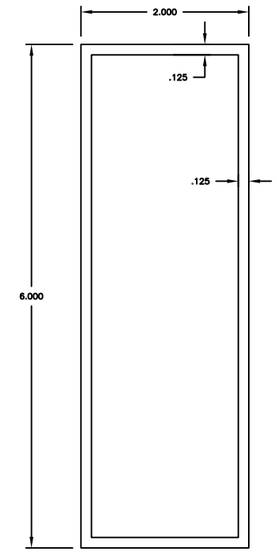

2 X 6
STD. MULLION
6063–T6

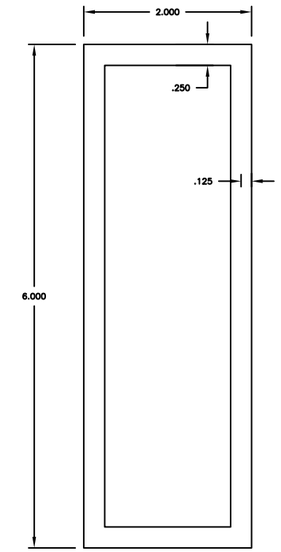

2 X 6
HEAVY MULLION
6063–T6

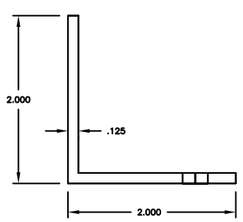

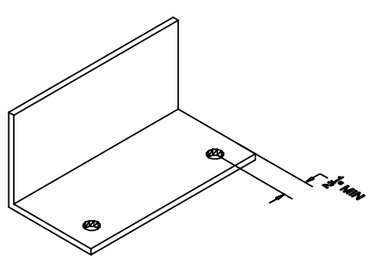

ANGLE CLIP
6063–T6

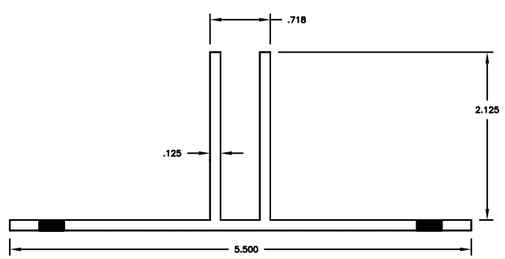

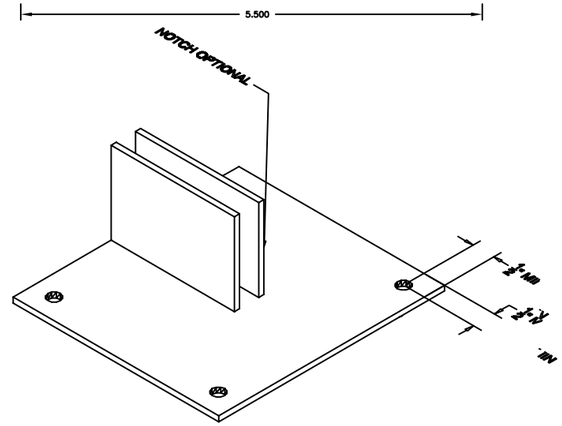

MULLION CLIP
6063–T6

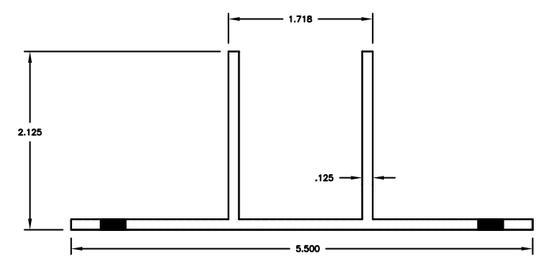

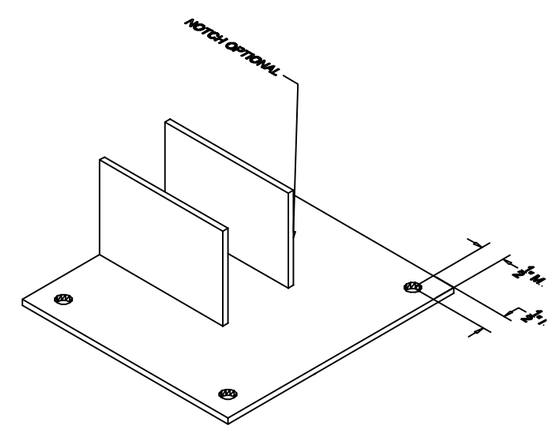

MULLION CLIP
6063–T6

Revision:
REVISED TABLE FORMAT AND ADDED DP TABLE ROUNDING NOTE

PREPARED BY A. LYNN MILLER
1070 TECHNOLOGY DRIVE
N. VENICE, FL 34275
(941) 480-1600
REGISTRATION #29296

window systems
ECO WINDOW SYSTEMS, LLC.
8502 N.W. 80th ST. MEDLEY, FL 33166
TEL. (305) 885-5299 FAX. (305) 885-5902

Series	Sheet	DWG No.	Rev.
MULLION	2 OF 9	MULLION-FPA	A

Title	Desc.	Drawn By	Date
ALUMINUM TUBE MULLIUONS	TYPES OF MULLIONS & CLIPS	A. M.	9/27/2022

ANTHONY LYNN MILLER
LICENSE
No. 58705
STATE OF FLORIDA
PROFESSIONAL ENGINEER
10/17/23

A. LYNN MILLER, P.E.
P.E.# 58705

Design Load Capacity - PSF (1 X 3 Tube Mullions)

Width (W)	Mull Type	Mull Span (in.)						
		38-3/8"	42"	50-5/8"	63"	74-1/4"	84"	96"
19-1/8"	Std.	+/-120.0	+/-120.0	+/-120.0	+/-120.0	+/-75.3	+/-52.0	+/-34.8
	Custom	+/-120.0	+/-120.0	+/-120.0	+/-120.0	+/-120.0	+/-84.2	+/-56.4
26-1/2"	Std.	+/-120.0	+/-120.0	+/-120.0	+/-89.0	+/-54.3	+/-37.5	+/-25.1
	Custom	+/-120.0	+/-120.0	+/-120.0	+/-120.0	+/-88.0	+/-60.8	+/-40.7
30"	Std.	+/-120.0	+/-120.0	+/-120.0	+/-79.6	+/-48.0	+/-33.2	+/-22.1
	Custom	+/-120.0	+/-120.0	+/-120.0	+/-120.0	+/-77.7	+/-53.7	+/-36.0
37"	Std.	+/-120.0	+/-120.0	+/-103.1	+/-63.7	+/-38.9	+/-26.9	-
	Custom	+/-120.0	+/-120.0	+/-120.0	+/-103.2	+/-63.0	+/-43.5	+/-29.2
42"	Std.	+/-120.0	+/-120.0	+/-90.8	+/-56.1	+/-34.3	+/-23.7	-
	Custom	+/-120.0	+/-120.0	+/-120.0	+/-90.9	+/-55.5	+/-38.3	+/-25.7
48"	Std.	+/-120.0	+/-116.8	+/-79.5	+/-49.1	+/-30.0	+/-20.7	-
	Custom	+/-120.0	+/-120.0	+/-120.0	+/-79.5	+/-48.6	+/-33.5	+/-22.5
54"	Std.	+/-120.0	+/-103.8	+/-70.6	+/-43.7	+/-26.7	-	
	Custom	+/-120.0	+/-120.0	+/-111.6	+/-70.7	+/-43.2	+/-29.8	
60"	Std.	+/-112.5	+/-93.4	+/-63.6	+/-39.3	+/-24.0	-	
	Custom	+/-120.0	+/-120.0	+/-100.4	+/-63.6	+/-38.9	+/-26.8	
66"	Std.	+/-102.3	+/-84.9	+/-57.8	+/-35.7	+/-21.8	-	
	Custom	+/-120.0	+/-120.0	+/-91.3	+/-57.8	+/-35.3	+/-24.4	
72"	Std.	+/-93.8	+/-77.9	+/-53.0	+/-32.7	-	-	
	Custom	+/-120.0	+/-120.0	+/-83.7	+/-53.0	+/-32.4	+/-22.4	

Design Load Capacity - PSF (1 X 4 Tube Mullions)

Width (W)	Mull Type	Mull Span (in.)										
		38-3/8"	42"	50-5/8"	63"	74-1/4"	84"	96"	108"	120"	132"	144"
19-1/8"	Std.	+/-120.0	+/-120.0	+/-120.0	+/-120.0	+/-120.0	+/-110.6	+/-74.8	-	-	-	-
	Custom	+/-120.0	+/-120.0	+/-120.0	+/-120.0	+/-120.0	+/-120.0	+/-116.9	+/-82.1	+/-59.9	+/-45.0	+/-34.6
26-1/2"	Std.	+/-120.0	+/-120.0	+/-120.0	+/-120.0	+/-103.4	+/-79.8	+/-54.0	-	-	-	-
	Custom	+/-120.0	+/-120.0	+/-120.0	+/-120.0	+/-120.0	+/-117.7	+/-84.4	+/-59.3	+/-43.2	+/-32.5	+/-25.0
30"	Std.	+/-120.0	+/-120.0	+/-120.0	+/-120.0	+/-91.3	+/-70.5	+/-47.7	-	-	-	-
	Custom	+/-120.0	+/-120.0	+/-120.0	+/-120.0	+/-120.0	+/-104.0	+/-74.5	+/-52.3	+/-38.2	+/-28.7	+/-22.1
37"	Std.	+/-120.0	+/-120.0	+/-120.0	+/-104.3	+/-74.0	+/-57.2	+/-38.7	-	-	-	
	Custom	+/-120.0	+/-120.0	+/-120.0	+/-120.0	+/-111.9	+/-84.3	+/-60.4	+/-42.4	+/-30.9	+/-23.2	
42"	Std.	+/-120.0	+/-120.0	+/-120.0	+/-91.9	+/-65.2	+/-50.4	+/-34.1	-	-	-	
	Custom	+/-120.0	+/-120.0	+/-120.0	+/-120.0	+/-98.6	+/-74.3	+/-53.2	+/-37.4	+/-27.3	+/-20.5	
48"	Std.	+/-120.0	+/-120.0	+/-120.0	+/-80.4	+/-57.1	+/-44.1	+/-29.8	-	-		
	Custom	+/-120.0	+/-120.0	+/-120.0	+/-120.0	+/-86.3	+/-65.0	+/-46.6	+/-32.7	+/-23.8		
54"	Std.	+/-120.0	+/-120.0	+/-112.5	+/-71.5	+/-50.7	+/-39.2	+/-26.5	-	-		
	Custom	+/-120.0	+/-120.0	+/-120.0	+/-108.3	+/-76.7	+/-57.8	+/-41.4	+/-29.1	+/-21.2		
60"	Std.	+/-120.0	+/-120.0	+/-101.3	+/-64.3	+/-45.7	+/-35.3	+/-23.8	-			
	Custom	+/-120.0	+/-120.0	+/-120.0	+/-97.5	+/-69.0	+/-52.0	+/-37.3	+/-26.2			
66"	Std.	+/-120.0	+/-120.0	+/-92.1	+/-58.5	+/-41.5	+/-32.1	+/-21.7	-			
	Custom	+/-120.0	+/-120.0	+/-120.0	+/-88.6	+/-62.7	+/-47.3	+/-33.9	+/-23.8			
72"	Std.	+/-120.0	+/-120.0	+/-84.4	+/-53.6	+/-38.0	+/-29.4	-	-			
	Custom	+/-120.0	+/-120.0	+/-120.0	+/-81.3	+/-59.7	+/-43.3	+/-31.1	+/-21.8			

Design Load Capacity - PSF (2 X 4 Std. Tube Mullions)

Width (W)	Mull Span (in.)										
	38-3/8"	42"	50-5/8"	63"	74-1/4"	84"	96"	108"	120"	132"	144"
19-1/8"	+/-120.0	+/-120.0	+/-120.0	+/-120.0	+/-120.0	+/-120.0	+/-109.3	+/-76.8	+/-56.0	+/-42.0	+/-32.4
26-1/2"	+/-120.0	+/-120.0	+/-120.0	+/-120.0	+/-120.0	+/-117.7	+/-78.9	+/-55.4	+/-40.4	+/-30.3	+/-23.4
30"	+/-120.0	+/-120.0	+/-120.0	+/-120.0	+/-120.0	+/-104.0	+/-69.7	+/-48.9	+/-35.7	+/-26.8	+/-20.6
37"	+/-120.0	+/-120.0	+/-120.0	+/-120.0	+/-116.3	+/-84.3	+/-56.5	+/-39.7	+/-28.9	+/-21.7	
42"	+/-120.0	+/-120.0	+/-120.0	+/-120.0	+/-102.4	+/-74.3	+/-49.8	+/-35.0	+/-25.5		
48"	+/-120.0	+/-120.0	+/-120.0	+/-120.0	+/-89.6	+/-65.0	+/-43.5	+/-30.6	+/-22.3		
54"	+/-120.0	+/-120.0	+/-120.0	+/-111.5	+/-79.7	+/-57.8	+/-37.8	+/-27.2			
60"	+/-120.0	+/-120.0	+/-120.0	+/-100.3	+/-71.7	+/-52.0	+/-34.8	+/-24.5			
66"	+/-120.0	+/-120.0	+/-120.0	+/-91.2	+/-65.2	+/-47.3	+/-31.7	+/-22.2			
72"	+/-120.0	+/-120.0	+/-120.0	+/-83.6	+/-59.7	+/-43.3	+/-29.0	+/-20.4			

Design Load Capacity - PSF (2 X 6 Tube Mullions)

Width (W)	Mull Type	Mull Span (in.)										
		38-3/8"	42"	50-5/8"	63"	74-1/4"	84"	96"	108"	120"	132"	144"
19-1/8"	Std.	+/-120.0	+/-120.0	+/-120.0	+/-120.0	+/-120.0	+/-120.0	+/-120.0	+/-120.0	+/-120.0	+/-116.8	+/-90.0
	Heavy	+/-120.0	+/-120.0	+/-120.0	+/-120.0	+/-120.0	+/-120.0	+/-120.0	+/-120.0	+/-120.0	+/-120.0	+/-120.0
26-1/2"	Std.	+/-120.0	+/-120.0	+/-120.0	+/-120.0	+/-120.0	+/-120.0	+/-120.0	+/-120.0	+/-110.9	+/-84.3	+/-64.9
	Heavy	+/-120.0	+/-120.0	+/-120.0	+/-120.0	+/-120.0	+/-120.0	+/-120.0	+/-120.0	+/-120.0	+/-120.0	+/-119.2
30"	Std.	+/-120.0	+/-120.0	+/-120.0	+/-120.0	+/-120.0	+/-120.0	+/-120.0	+/-120.0	+/-97.9	+/-74.5	+/-57.4
	Heavy	+/-120.0	+/-120.0	+/-120.0	+/-120.0	+/-120.0	+/-120.0	+/-120.0	+/-120.0	+/-120.0	+/-120.0	+/-105.3
37"	Std.	+/-120.0	+/-120.0	+/-120.0	+/-120.0	+/-120.0	+/-120.0	+/-120.0	+/-98.7	+/-79.4	+/-60.4	+/-46.5
	Heavy	+/-120.0	+/-120.0	+/-120.0	+/-120.0	+/-120.0	+/-120.0	+/-120.0	+/-120.0	+/-120.0	+/-110.8	+/-85.4
42"	Std.	+/-120.0	+/-120.0	+/-120.0	+/-120.0	+/-120.0	+/-120.0	+/-110.9	+/-87.0	+/-69.9	+/-53.2	+/-41.0
	Heavy	+/-120.0	+/-120.0	+/-120.0	+/-120.0	+/-120.0	+/-120.0	+/-120.0	+/-120.0	+/-120.0	+/-97.6	+/-75.2
48"	Std.	+/-120.0	+/-120.0	+/-120.0	+/-120.0	+/-120.0	+/-120.0	+/-97.0	+/-76.1	+/-61.2	+/-46.5	+/-35.8
	Heavy	+/-120.0	+/-120.0	+/-120.0	+/-120.0	+/-120.0	+/-120.0	+/-120.0	+/-120.0	+/-111.8	+/-85.4	+/-65.8
54"	Std.	+/-120.0	+/-120.0	+/-120.0	+/-120.0	+/-120.0	+/-120.0	+/-86.2	+/-67.6	+/-54.4	+/-41.4	+/-31.9
	Heavy	+/-120.0	+/-120.0	+/-120.0	+/-120.0	+/-120.0	+/-120.0	+/-120.0	+/-120.0	+/-99.4	+/-75.9	+/-58.5
60"	Std.	+/-120.0	+/-120.0	+/-120.0	+/-120.0	+/-120.0	+/-120.0	+/-77.6	+/-60.9	+/-49.0	+/-37.2	+/-28.7
	Heavy	+/-120.0	+/-120.0	+/-120.0	+/-120.0	+/-120.0	+/-120.0	+/-120.0	+/-111.3	+/-89.5	+/-68.4	+/-52.6
66"	Std.	+/-120.0	+/-120.0	+/-120.0	+/-120.0	+/-120.0	+/-120.0	+/-70.6	+/-55.3	+/-44.5	+/-33.8	+/-26.1
	Heavy	+/-120.0	+/-120.0	+/-120.0	+/-120.0	+/-120.0	+/-120.0	+/-120.0	+/-101.2	+/-81.3	+/-62.1	+/-47.9
72"	Std.	+/-120.0	+/-120.0	+/-120.0	+/-120.0	+/-120.0	+/-120.0	+/-64.7	+/-50.7	+/-40.8	+/-31.0	+/-23.9
	Heavy	+/-120.0	+/-120.0	+/-120.0	+/-120.0	+/-120.0	+/-120.0	+/-118.3	+/-92.7	+/-74.6	+/-57.0	+/-43.9

NOTE:
MULLIONS RATED IN THESE CHARTS MAY BE ORIENTED VERTICALLY OR HORIZONTALLY.

FOR SIZES NOT SHOWN, ROUND UP TO THE NEXT AVAILABLE WIDTH OR SPAN DIMENSION SHOWN ON THE TABLE. (INTERPOLATION BETWEEN WIDTHS ALLOWED)

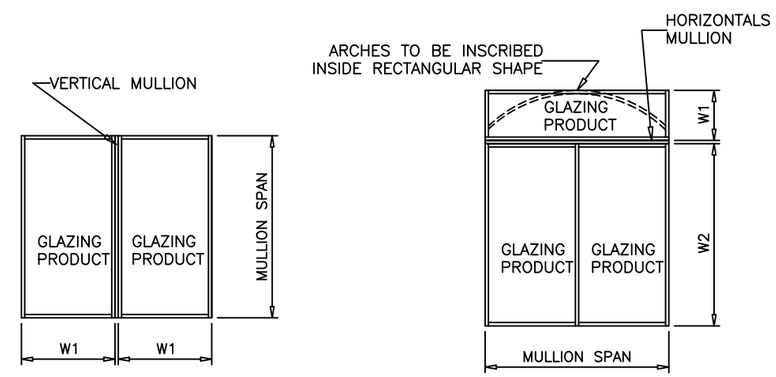

TYPICAL MULLION ARRANGEMENTS

$$\text{WIDTH (W)} = \frac{W1 + W2}{2}$$

MULLIONS

Revision:
REVISED TABLE FORMAT AND ADDED DP TABLE ROUNDING NOTE

PREPARED BY A. LYNN MILLER
1070 TECHNOLOGY DRIVE
N. VENICE, FL 34275
(941) 480-1600
REGISTRATION #29296

window systems
ECO WINDOW SYSTEMS, LLC.
8502 N.W. 80th ST., MEDLEY, FL 33166
TEL: (305) 885-5299 FAX: (305) 885-5902

Series	Desc.	Sheet	DWG No.	Drawn By	Date	Rev.
MULLION	MULLIONS LOAD DESIGNS	3 OF 9	MULLION-FPA	A. M.	9/27/2022	A

Title: ALUMINUM TUBE MULLIUONS

ANTHONY LYNN MILLER
LICENSE
No. 58705
10/17/23
STATE OF FLORIDA
PROFESSIONAL ENGINEER

A. LYNN MILLER, P.E.
P.E.# 58705

Design Load Capacity - PSF (A2 Anchor Type)

Width (W)	Mull Span (in.)										
	38-3/8"	42"	50-5/8"	63"	74-1/4"	84"	96"	108"	120"	132"	144"
19-1/8"	+/-120.0	+/-120.0	+/-120.0	+/-120.0	+/-120.0	+/-120.0	+/-120.0	+/-108.8	+/-97.9	+/-89.0	+/-81.6
26-1/2"	+/-120.0	+/-120.0	+/-120.0	+/-120.0	+/-114.2	+/-100.9	+/-88.3	+/-78.5	+/-70.6	+/-64.2	+/-58.9
30"	+/-120.0	+/-120.0	+/-120.0	+/-118.9	+/-100.8	+/-89.1	+/-78.0	+/-69.3	+/-62.4	+/-56.7	+/-52.0
37"	+/-120.0	+/-120.0	+/-119.9	+/-96.4	+/-81.8	+/-72.3	+/-63.2	+/-56.2	+/-50.6	+/-46.0	+/-42.2
42"	+/-120.0	+/-120.0	+/-105.7	+/-84.9	+/-72.0	+/-63.7	+/-55.7	+/-49.5	+/-44.6	+/-40.5	+/-37.1
48"	+/-120.0	+/-111.4	+/-92.4	+/-74.3	+/-63.0	+/-55.7	+/-48.8	+/-43.3	+/-39.0	+/-35.5	+/-32.5
54"	+/-108.4	+/-99.0	+/-82.2	+/-66.0	+/-56.0	+/-49.5	+/-43.3	+/-38.5	+/-34.7	+/-31.5	+/-28.9
60"	+/-97.6	+/-89.1	+/-74.0	+/-59.4	+/-50.4	+/-44.6	+/-39.0	+/-34.7	+/-31.2	+/-28.4	+/-26.0
66"	+/-88.7	+/-81.0	+/-67.2	+/-54.0	+/-45.8	+/-40.5	+/-35.5	+/-31.5	+/-28.4	+/-25.8	+/-23.6
72"	+/-81.3	+/-74.3	+/-61.6	+/-49.5	+/-42.0	+/-37.1	+/-32.5	+/-28.9	+/-26.0	+/-23.6	+/-21.7

Design Load Capacity - PSF (A4 Anchor Type)

Width (W)	Mull Span (in.)										
	38-3/8"	42"	50-5/8"	63"	74-1/4"	84"	96"	108"	120"	132"	144"
19-1/8"	+/-120.0	+/-120.0	+/-120.0	+/-120.0	+/-120.0	+/-120.0	+/-120.0	+/-120.0	+/-120.0	+/-120.0	+/-120.0
26-1/2"	+/-120.0	+/-120.0	+/-120.0	+/-120.0	+/-120.0	+/-120.0	+/-120.0	+/-120.0	+/-120.0	+/-112.0	+/-102.6
30"	+/-120.0	+/-120.0	+/-120.0	+/-120.0	+/-120.0	+/-120.0	+/-120.0	+/-120.0	+/-108.8	+/-98.9	+/-90.7
37"	+/-120.0	+/-120.0	+/-120.0	+/-120.0	+/-120.0	+/-120.0	+/-110.3	+/-98.0	+/-88.2	+/-80.2	+/-73.5
42"	+/-120.0	+/-120.0	+/-120.0	+/-120.0	+/-120.0	+/-111.0	+/-97.1	+/-86.3	+/-77.7	+/-70.6	+/-64.8
48"	+/-120.0	+/-120.0	+/-120.0	+/-120.0	+/-109.9	+/-97.1	+/-85.0	+/-75.6	+/-68.0	+/-61.8	+/-56.7
54"	+/-120.0	+/-120.0	+/-120.0	+/-115.1	+/-97.7	+/-86.3	+/-75.6	+/-67.2	+/-60.4	+/-54.9	+/-50.4
60"	+/-120.0	+/-120.0	+/-120.0	+/-103.6	+/-87.9	+/-77.7	+/-68.0	+/-60.4	+/-54.4	+/-49.5	+/-45.3
66"	+/-120.0	+/-120.0	+/-117.2	+/-94.2	+/-79.9	+/-70.6	+/-61.8	+/-54.9	+/-49.5	+/-45.0	+/-41.2
72"	+/-120.0	+/-120.0	+/-107.5	+/-86.2	+/-73.3	+/-64.8	+/-56.7	+/-50.4	+/-45.3	+/-41.2	+/-37.8

Design Load Capacity - PSF (A6 Anchor Type)

Width (W)	Mull Span (in.)										
	38-3/8"	42"	50-5/8"	63"	74-1/4"	84"	96"	108"	120"	132"	144"
19-1/8"	+/-120.0	+/-120.0	+/-120.0	+/-120.0	+/-120.0	+/-120.0	+/-120.0	+/-120.0	+/-120.0	+/-120.0	+/-120.0
26-1/2"	+/-120.0	+/-120.0	+/-120.0	+/-120.0	+/-120.0	+/-120.0	+/-120.0	+/-120.0	+/-120.0	+/-120.0	+/-120.0
30"	+/-120.0	+/-120.0	+/-120.0	+/-120.0	+/-120.0	+/-120.0	+/-120.0	+/-120.0	+/-120.0	+/-120.0	+/-120.0
37"	+/-120.0	+/-120.0	+/-120.0	+/-120.0	+/-120.0	+/-120.0	+/-120.0	+/-120.0	+/-120.0	+/-120.0	+/-110.3
42"	+/-120.0	+/-120.0	+/-120.0	+/-120.0	+/-120.0	+/-120.0	+/-120.0	+/-120.0	+/-116.6	+/-106.0	+/-97.1
48"	+/-120.0	+/-120.0	+/-120.0	+/-120.0	+/-120.0	+/-120.0	+/-120.0	+/-113.3	+/-102.0	+/-92.7	+/-85.0
54"	+/-120.0	+/-120.0	+/-120.0	+/-120.0	+/-120.0	+/-120.0	+/-113.3	+/-100.7	+/-90.7	+/-82.4	+/-75.6
60"	+/-120.0	+/-120.0	+/-120.0	+/-120.0	+/-120.0	+/-116.6	+/-102.0	+/-90.7	+/-81.6	+/-74.2	+/-68.0
66"	+/-120.0	+/-120.0	+/-120.0	+/-120.0	+/-119.9	+/-106.0	+/-92.7	+/-82.4	+/-74.2	+/-67.4	+/-61.8
72"	+/-120.0	+/-120.0	+/-120.0	+/-120.0	+/-109.9	+/-97.1	+/-85.0	+/-75.6	+/-68.0	+/-61.8	+/-56.7

Design Load Capacity - PSF (B2 Anchor Type)

Width (W)	Mull Span (in.)										
	38-3/8"	42"	50-5/8"	63"	74-1/4"	84"	96"	108"	120"	132"	144"
19-1/8"	+/-120.0	+/-120.0	+/-120.0	+/-119.5	+/-101.4	+/-89.6	+/-78.4	+/-69.7	+/-62.7	+/-57.0	+/-52.3
26-1/2"	+/-120.0	+/-120.0	+/-107.3	+/-86.3	+/-73.2	+/-64.7	+/-56.6	+/-50.3	+/-45.3	+/-41.2	+/-37.7
30"	+/-120.0	+/-114.3	+/-94.8	+/-76.2	+/-64.6	+/-57.1	+/-50.0	+/-44.4	+/-40.0	+/-36.4	+/-33.3
37"	+/-101.4	+/-92.7	+/-76.9	+/-61.8	+/-52.4	+/-46.3	+/-40.5	+/-36.0	+/-32.4	+/-29.5	+/-27.0
42"	+/-89.3	+/-81.6	+/-67.7	+/-54.4	+/-46.2	+/-40.8	+/-35.7	+/-31.7	+/-28.6	+/-26.0	+/-23.8
48"	+/-78.2	+/-71.4	+/-59.3	+/-47.6	+/-40.4	+/-35.7	+/-31.3	+/-27.8	+/-25.0	+/-22.7	+/-20.8
54"	+/-69.5	+/-63.5	+/-52.7	+/-42.3	+/-35.9	+/-31.7	+/-27.8	+/-24.7	+/-22.2	+/-20.2	
60"	+/-62.5	+/-57.1	+/-47.4	+/-38.1	+/-32.3	+/-28.6	+/-25.0	+/-22.2	+/-20.0		
66"	+/-56.9	+/-51.9	+/-43.1	+/-34.6	+/-29.4	+/-26.0	+/-22.7	+/-20.2			
72"	+/-52.1	+/-47.6	+/-39.5	+/-31.7	+/-26.9	+/-23.8	+/-20.8				

Design Load Capacity - PSF (B4a Anchor Type)

Width (W)	Mull Span (in.)										
	38-3/8"	42"	50-5/8"	63"	74-1/4"	84"	96"	108"	120"	132"	144"
19-1/8"	+/-120.0	+/-120.0	+/-120.0	+/-120.0	+/-120.0	+/-120.0	+/-112.9	+/-100.4	+/-90.4	+/-82.1	+/-75.3
26-1/2"	+/-120.0	+/-120.0	+/-120.0	+/-120.0	+/-105.4	+/-93.2	+/-81.5	+/-72.5	+/-65.2	+/-59.3	+/-54.3
30"	+/-120.0	+/-120.0	+/-120.0	+/-109.7	+/-93.1	+/-82.3	+/-72.0	+/-64.0	+/-57.6	+/-52.4	+/-48.0
37"	+/-120.0	+/-120.0	+/-110.7	+/-89.0	+/-75.5	+/-66.7	+/-58.4	+/-51.9	+/-46.7	+/-42.5	+/-38.9
42"	+/-120.0	+/-117.6	+/-97.5	+/-78.4	+/-66.5	+/-58.8	+/-51.4	+/-45.7	+/-41.1	+/-37.4	+/-34.3
48"	+/-112.6	+/-102.9	+/-85.3	+/-68.6	+/-58.2	+/-51.4	+/-45.0	+/-40.0	+/-36.0	+/-32.7	+/-30.0
54"	+/-100.1	+/-91.4	+/-75.9	+/-61.0	+/-51.7	+/-45.7	+/-40.0	+/-35.6	+/-32.0	+/-29.1	+/-26.7
60"	+/-90.1	+/-82.3	+/-68.3	+/-54.9	+/-46.5	+/-41.1	+/-36.0	+/-32.0	+/-28.8	+/-26.2	+/-24.0
66"	+/-81.9	+/-74.8	+/-62.1	+/-49.9	+/-42.3	+/-37.4	+/-32.7	+/-29.1	+/-26.2	+/-23.8	+/-21.8
72"	+/-75.0	+/-68.6	+/-56.9	+/-45.7	+/-38.8	+/-34.3	+/-30.0	+/-26.7	+/-24.0	+/-21.8	+/-20.0

Design Load Capacity - PSF (B4b Anchor Type)

Width (W)	Mull Span (in.)										
	38-3/8"	42"	50-5/8"	63"	74-1/4"	84"	96"	108"	120"	132"	144"
19-1/8"	+/-120.0	+/-120.0	+/-120.0	+/-120.0	+/-120.0	+/-120.0	+/-120.0	+/-120.0	+/-120.0	+/-114.1	+/-104.6
26-1/2"	+/-120.0	+/-120.0	+/-120.0	+/-120.0	+/-120.0	+/-120.0	+/-113.2	+/-100.6	+/-90.6	+/-82.3	+/-75.5
30"	+/-120.0	+/-120.0	+/-120.0	+/-120.0	+/-120.0	+/-114.3	+/-100.0	+/-88.9	+/-80.0	+/-72.7	+/-66.7
37"	+/-120.0	+/-120.0	+/-120.0	+/-120.0	+/-104.8	+/-92.7	+/-81.1	+/-72.1	+/-64.9	+/-59.0	+/-54.1
42"	+/-120.0	+/-120.0	+/-120.0	+/-108.8	+/-92.4	+/-81.6	+/-71.4	+/-63.5	+/-57.1	+/-51.9	+/-47.6
48"	+/-120.0	+/-120.0	+/-118.5	+/-95.2	+/-80.8	+/-71.4	+/-62.5	+/-55.6	+/-50.0	+/-45.5	+/-41.7
54"	+/-120.0	+/-120.0	+/-105.3	+/-84.7	+/-71.8	+/-63.5	+/-55.6	+/-49.4	+/-44.4	+/-40.4	+/-37.0
60"	+/-120.0	+/-114.3	+/-94.8	+/-76.2	+/-64.6	+/-57.1	+/-50.0	+/-44.4	+/-40.0	+/-36.4	+/-33.3
66"	+/-113.7	+/-103.9	+/-86.2	+/-69.3	+/-58.8	+/-51.9	+/-45.5	+/-40.4	+/-36.4	+/-33.1	+/-30.3
72"	+/-104.2	+/-95.2	+/-79.0	+/-63.5	+/-53.9	+/-47.6	+/-41.7	+/-37.0	+/-33.3	+/-30.3	+/-27.8

NOTE:

ANY ANCHOR CONDITION SHOWN HEREIN MAY COVER LOCATIONS AT HEAD, SILL OR JAMB ENDS.
FOR ANCHORS DESCRIPTION SEE SHEETS 5 THRU 9.

FOR SIZES NOT SHOWN, ROUND UP TO THE NEXT AVAILABLE WIDTH OR SPAN DIMENSION SHOWN ON THE TABLE.
(INTERPOLATION BETWEEN WIDTHS OR SPANS ALLOWED)

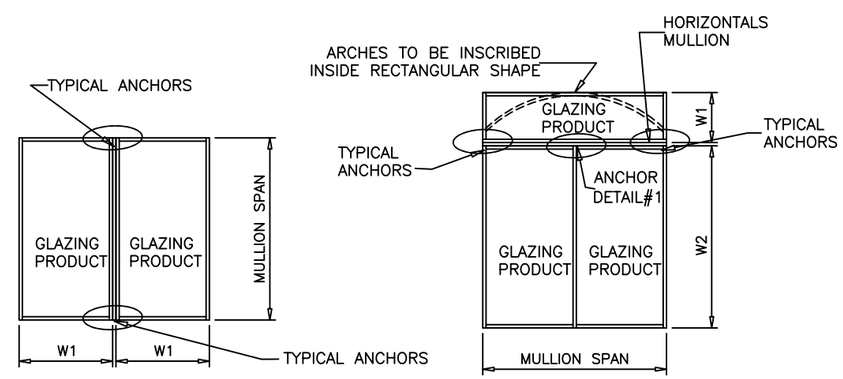

TYPICAL MULLION ARRANGEMENTS

$$\text{WIDTH (W)} = \frac{W1 + W2}{2}$$

ANCHORS

Revision:
REVISED TABLE FORMAT AND ADDED DP TABLE ROUNDING NOTE

PREPARED BY A. LYNN MILLER
1070 TECHNOLOGY DRIVE
N. VENICE, FL 34275
(941) 480-1600
REGISTRATION #29296

ECO window systems
ECO WINDOW SYSTEMS, LLC.
8502 N.W. 80th ST. MEDLEY, FL 33166
TEL. (305) 885-5299 FAX. (305) 885-5902

Series	Desc.	Title	Sheet	DWG No.	Drawn By	Date	Rev.
MULLION	ANCHORS LOAD DESIGN	ALUMINUM TUBE MULLIUONS	4 OF 9	MULLION-FPA	A. M.	9/27/2022	A

ANTHONY LYNN MILLER
LICENSE
No. 58705
A. Lynn Miller
10/17/23
STATE OF FLORIDA
PROFESSIONAL ENGINEER

A. LYNN MILLER, P.E.
P.E.# 58705

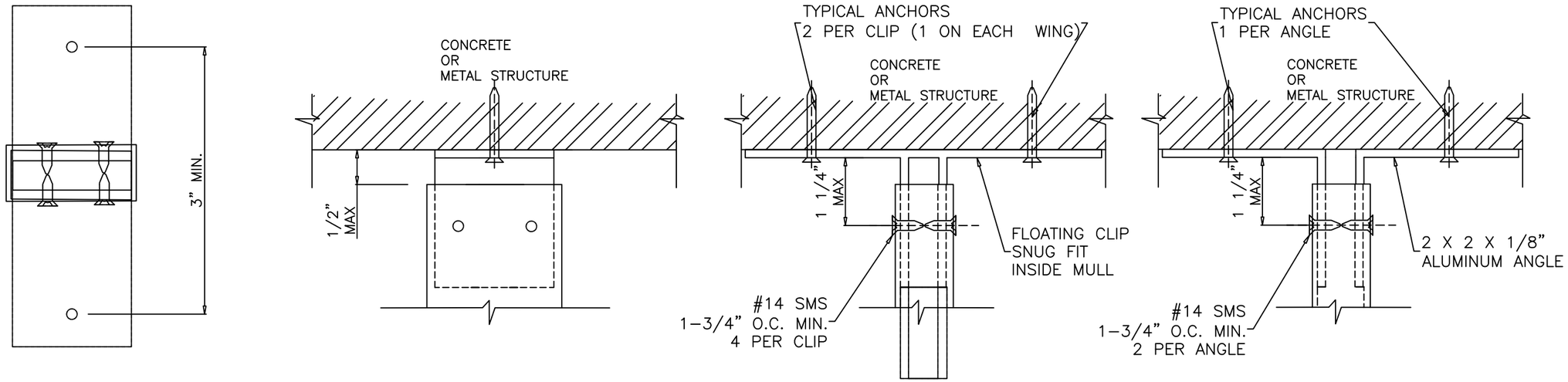

ANCHORS TYPE 'A2'

TYPICAL ANCHORS:			
ANCHOR TYPES	SUBSTRATE	MIN. EMBED.	MIN. EDGE DIST.
1/4" DIA. ULTRACON + (Fu=164 KSI, fy=148 KSI)	CONCRETE	1-3/4"	2-1/2"
1/4" DIA. SELF DRILLING SCREWS (GRADE 5 CRS)	METAL	1/8"	3/4"

CONCRETE = f'c = 3000 PSI MIN.
METAL = 1/8" MIN. THK. STEEL Fy = 36 KSI MIN.
1/8" MIN. THK. ALUMINUM (6063-T5 MIN.)
ANCHORS MAY BE HEX OR FLAT HEAD.

ALL CLIPS AND ANGLES TO FIT SNUG INTO TUBE MULLIONS.
CLIPS OR ANGLES CONNECTED DIRECTLY TO MASONRY TO BE PROTECTED
WITH ALKALI-RESISTANCE COATINGS, SUCH AS BUTUMINOUS PAINT OR WATER-WHITE METHACRYLATE LACQUER

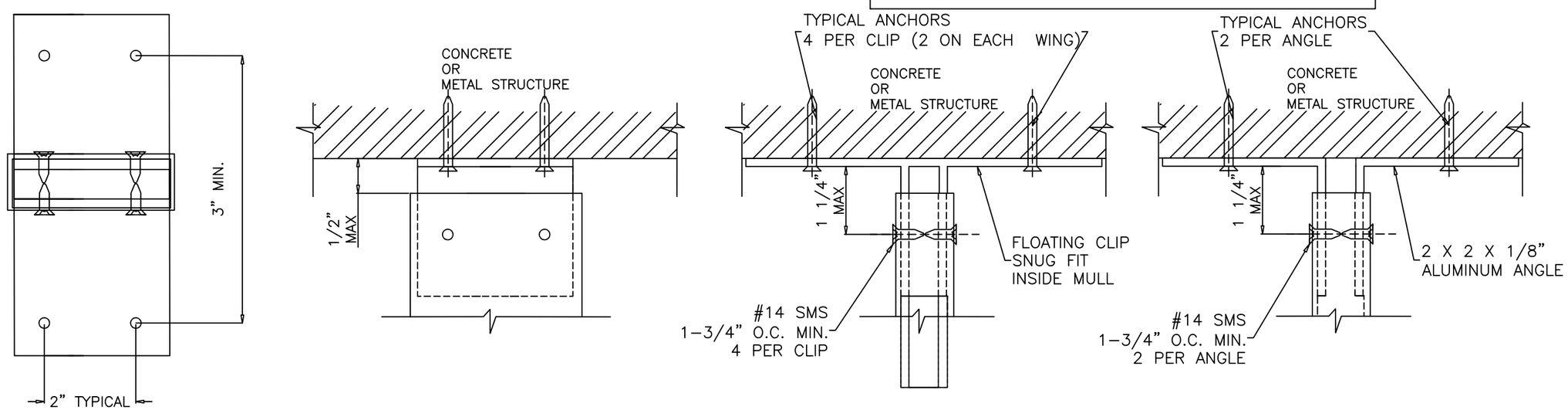

ANCHORS TYPE 'A4'

Revision:
REVISED TABLE FORMAT AND ADDED DP TABLE ROUNDING NOTE

PREPARED BY A. LYNN MILLER
1070 TECHNOLOGY DRIVE
N. VENICE, FL 34275
(941) 480-1600
REGISTRATION #29296

ECO window systems
ECO WINDOW SYSTEMS, LLC.
8502 N.W. 80th ST., MEDLEY, FL 33166
TEL. (305) 885-5299 FAX. (305) 885-5902

Series	Sheet	DWG No.	Drawn By	Date	Rev.
MULLION	5 OF 9	MULLION-FPA	A. M.	9/27/2022	A

Title: ALUMINUM TUBE MULLIUONS
Desc.: ANCHOR DETAILS

ANTHONY LYNN MILLER
LICENSE
No. 58705
A. Lynn Miller
10/17/23
STATE OF FLORIDA
PROFESSIONAL ENGINEER

A. LYNN MILLER, P.E.
P.E.# 58705

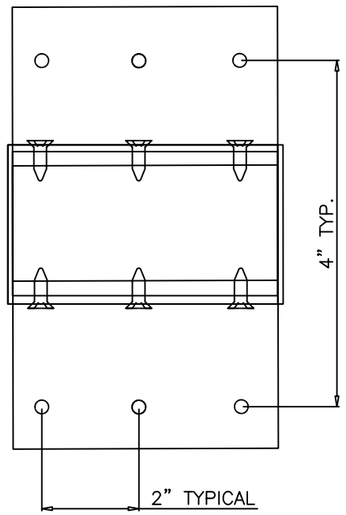

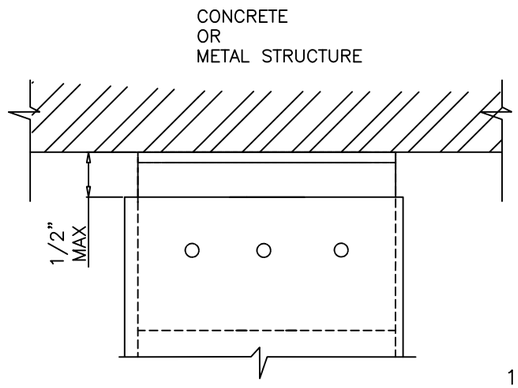

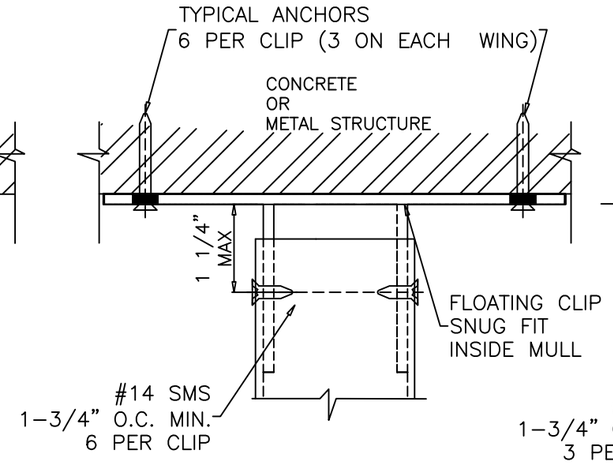

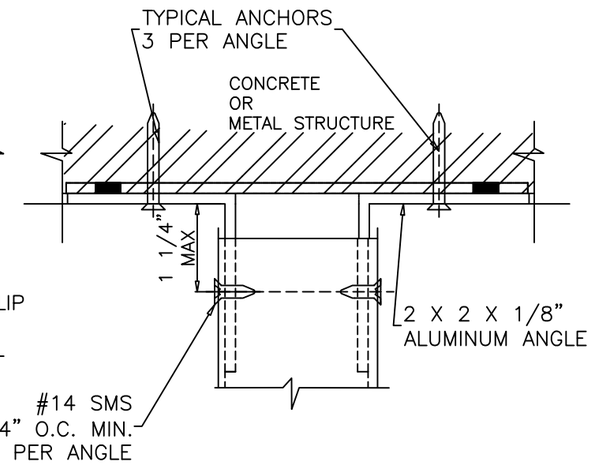

ANCHORS TYPE 'A6'

TYPICAL ANCHORS:			
ANCHOR TYPES	SUBSTRATE	MIN. EMBED.	MIN. EDGE DIST.
1/4" DIA. ULTRACON + (Fu=164 KSI, fy=148 KSI)	CONCRETE	1-3/4"	2-1/2"
1/4" DIA. SELF DRILLING SCREWS (GRADE 5 CRS)	METAL	1/8"	3/4"

CONCRETE = f'c = 3000 PSI MIN.
METAL = 1/8" MIN. THK. STEEL Fy = 36 KSI MIN.
1/8" MIN. THK. ALUMINUM (6063-T5 MIN.)
ANCHORS MAY BE HEX OR FLAT HEAD.

ALL CLIPS AND ANGLES TO FIT SNUG INTO TUBE MULLIONS.
CLIPS OR ANGLES CONNECTED DIRECTLY TO MASONRY TO BE PROTECTED
WITH ALKALI-RESISTANCE COATINGS, SUCH AS BUTUMINOUS PAINT OR WATER-WHITE METHACRYLATE LACQUER

Revision:
REVISED TABLE FORMAT AND ADDED DP TABLE ROUNDING NOTE

PREPARED BY A. LYNN MILLER
1070 TECHNOLOGY DRIVE
N. VENICE, FL 34275
(941) 480-1600
REGISTRATION #29296

Date: 9/27/2022
Rev.: A
Drawn By: A. M.
DWG No.: MULLION-FPA
Sheet: 6 OF 9

eco window systems
ECO WINDOW SYSTEMS, LLC.
8502 N.W. 80th ST., MEDLEY, FL 33166
TEL. (305) 885-5299 FAX. (305) 885-5902

Title: ALUMINUM TUBE MULLIUONS
Desc.: ANCHOR DETAILS
Series: MULLION

ANTHONY LYNN MILLER
LICENSE
No. 58705
10/17/23
STATE OF FLORIDA
PROFESSIONAL ENGINEER
A. LYNN MILLER, P.E.
P.E.# 58705

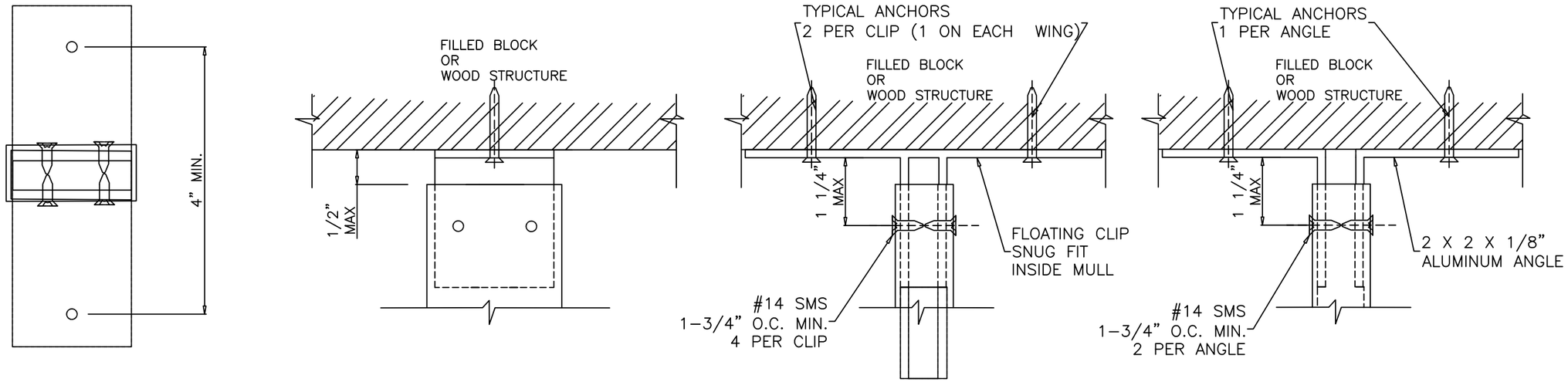

ANCHORS TYPE 'B2'

TYPICAL ANCHORS:			
ANCHOR TYPES	SUBSTRATE	MIN. EMBED.	MIN. EDGE DIST.
1/4" DIA. ULTRACON + (Fu=164 KSI, fy=148 KSI)	MASONRY	1-3/4"	2-1/2"
	WOOD	1-1/2"	1"

WOOD = 2BY WOOD BUCKS OR WOOD STRUCTURE S.G. = 0.55 MIN.
NASONRY = C-90 HOLLOW/FILLED BLOCK f'm = 2000 PSI MIN.

ANCHORS MAY BE HEX OR FLAT HEAD.

1BY OR 2BY WOOD BUCKS NOT BY 'ECO WINDOWS' MUST SUSTAIN LOADS IMPOSED BY GLAZING SYSTEM AND TRANSFER THEM TO BUILDING STRUCTURE

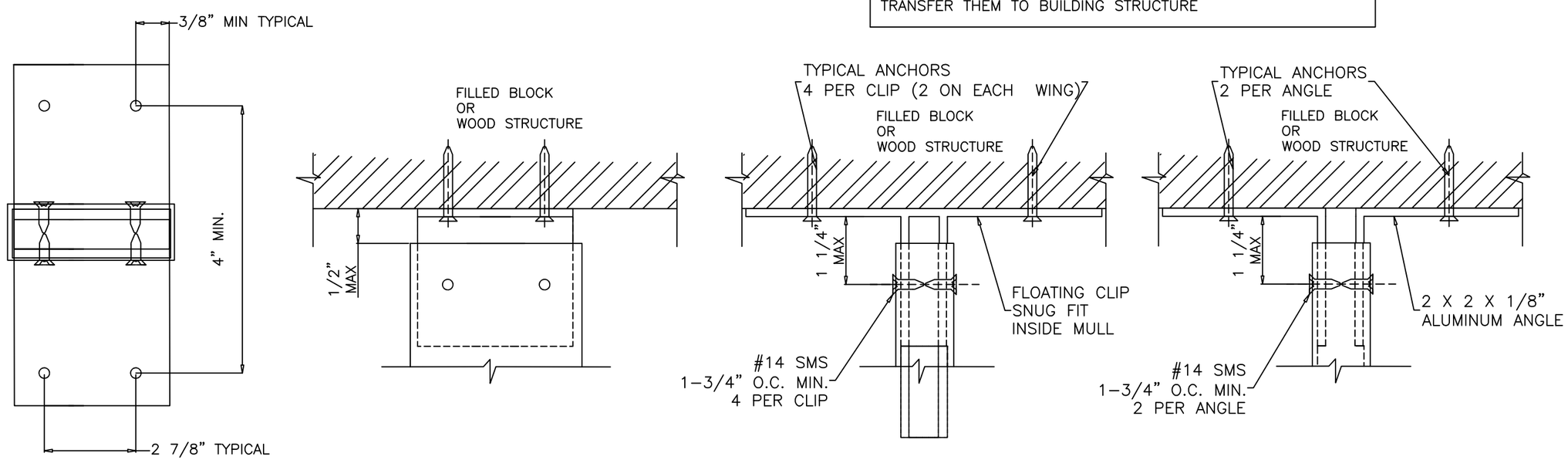

ANCHORS TYPE 'B4a'

Revision:
REVISED TABLE FORMAT AND ADDED DP TABLE ROUNDING NOTE

PREPARED BY A. LYNN MILLER
1070 TECHNOLOGY DRIVE
N. VENICE, FL 34275
(941) 480-1600
REGISTRATION #29296

ECO window systems
ECO WINDOW SYSTEMS, LLC.
8502 N.W. 80th ST., MEDLEY, FL 33166
TEL. (305) 885-5299 FAX. (305) 885-5902

Series	Sheet	DWG No.	Rev.
MULLION	7 OF 9	MULLION-FPA	A

Title	Desc.	Drawn By	Date
ALUMINUM TUBE MULLIUONS	ANCHOR DETAILS	A. M.	9/27/2022

ANTHONY LYNN MILLER
LICENSE
No. 58705
A. Lynn Miller
10/17/23
STATE OF FLORIDA
PROFESSIONAL ENGINEER

A. LYNN MILLER, P.E.
P.E.# 58705

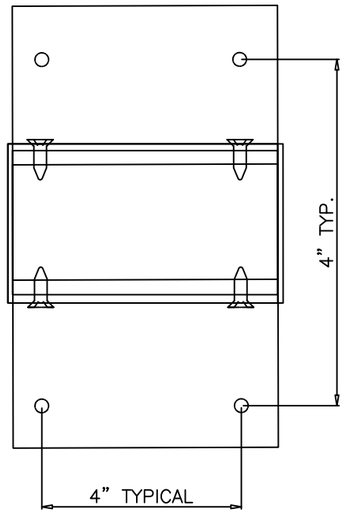

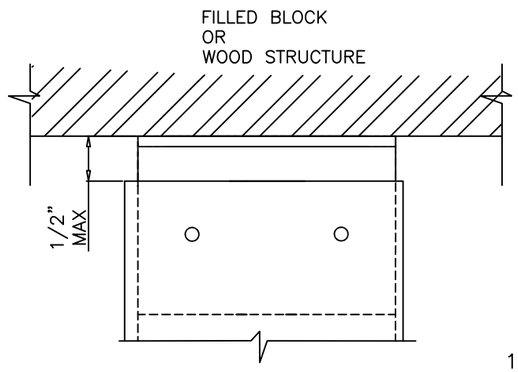

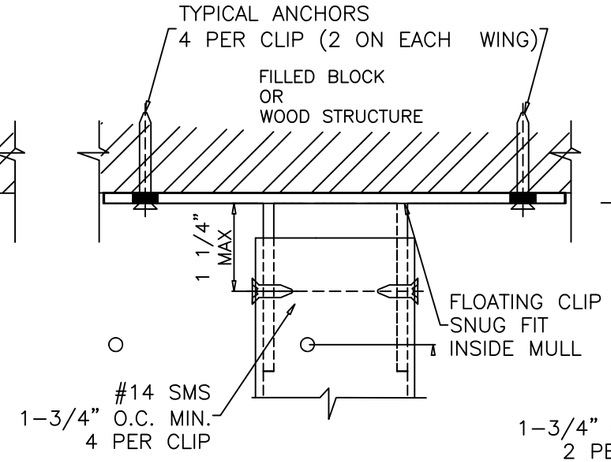

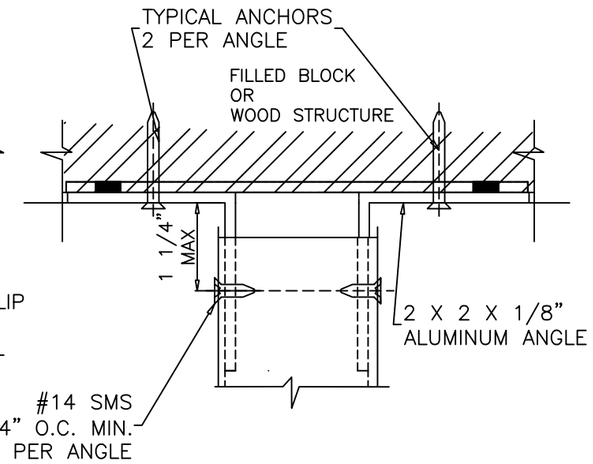

ANCHORS TYPE 'B4b'

TYPICAL ANCHORS:			
ANCHOR TYPES	SUBSTRATE	MIN. EMBED.	MIN. EDGE DIST.
1/4" DIA. ULTRACON + (Fu=164 KSI, fy=148 KSI)	MASONRY	1-3/4"	2-1/2"
	WOOD	1-1/2"	1"

WOOD = 2BY WOOD BUCKS OR WOOD STRUCTURE S.G. = 0.55 MIN.
NASONRY = C-90 HOLLOW/FILLED BLOCK f'm = 2000 PSI MIN.

ANCHORS MAY BE HEX OR FLAT HEAD.

1BY OR 2BY WOOD BUCKS NOT BY 'ECO WINDOWS' MUST SUSTAIN LOADS IMPOSED BY GLAZING SYSTEM AND TRANSFER THEM TO BUILDING STRUCTURE

Revision:
REVISED TABLE FORMAT AND ADDED DP TABLE ROUNDING NOTE

PREPARED BY A. LYNN MILLER
1070 TECHNOLOGY DRIVE
N. VENICE, FL 34275
(941) 480-1600
REGISTRATION #29296

Date: 9/27/2022
Drawn By: A. M.
Rev. A
DWG No. MULLION-FPA
Sheet 8 OF 9

ECO window systems
ECO WINDOW SYSTEMS, LLC.
8502 N.W. 80th ST., MEDLEY, FL 33166
TEL. (305) 885-5299 FAX. (305) 885-5902

Title: ALUMINUM TUBE MULLIUONS
Desc.: ANCHOR DETAILS
Series: MULLION

ANTHONY LYNN MILLER
LICENSE
No. 58705
10/17/23
STATE OF FLORIDA
PROFESSIONAL ENGINEER
A. LYNN MILLER, P.E.
P.E.# 58705

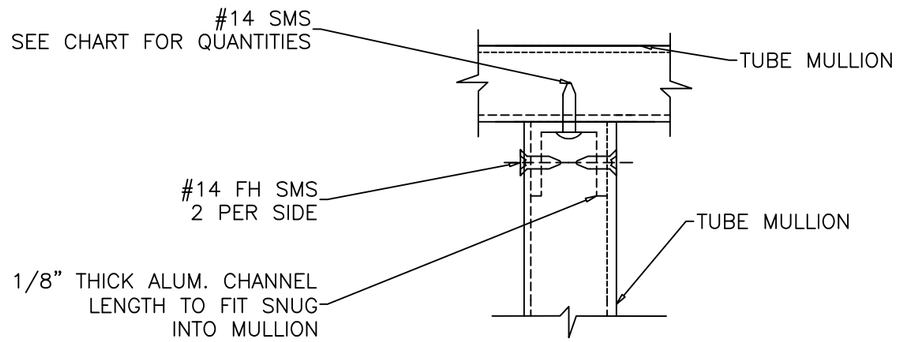

ANCHOR CHART	NO. OF SCREWS
TYPE A2	2
TYPE A4	3
TYPE A6	4

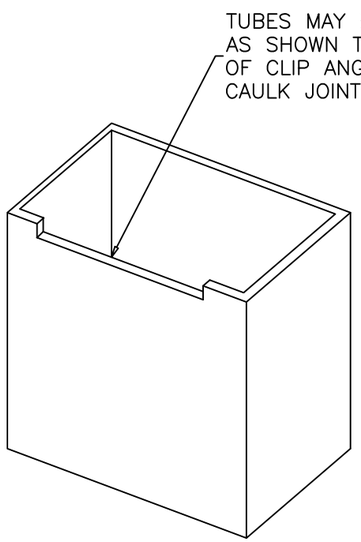

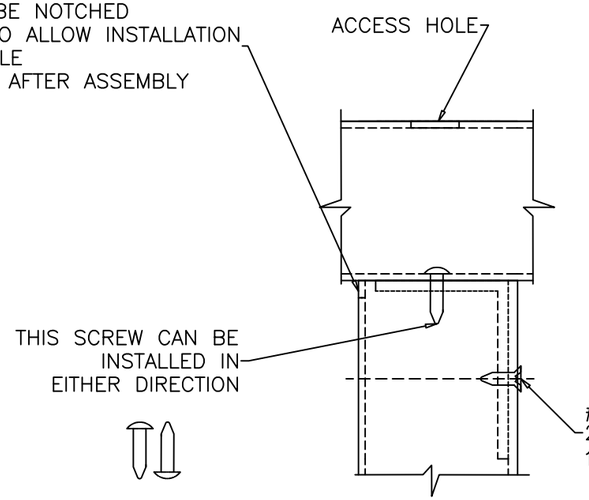

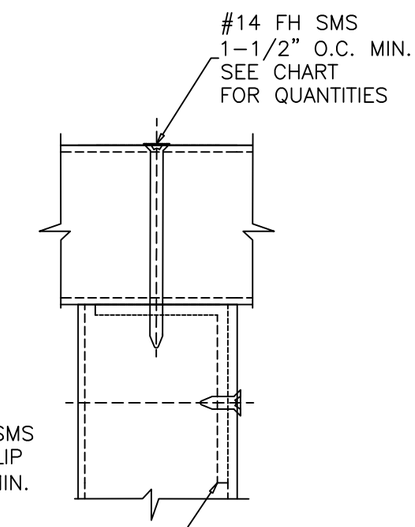

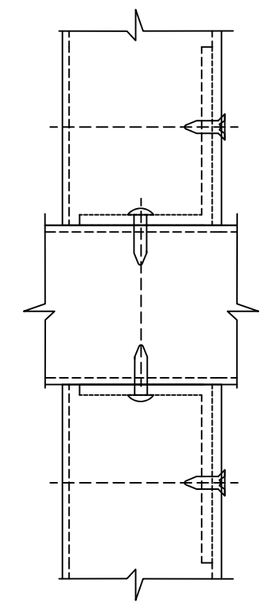

1-3/4" X 2" X 1/8" FOR 2BY TUBE
3/4" X 2" X 1/8" FOR 1 BY TUBE
ALUM ANGLE CUT TO FIT SNUG INSIDE TUBE

ANCHORS DETAILS #1

METAL TO METAL CONNECTION

#14 SMS		
SUBSTRATE	Ed. = MIN. EDGE DIST.	MIN. CL TO CL SPACING
ALUMINUM	5/8"	1/2"

Revision:
REVISED TABLE FORMAT AND ADDED DP TABLE ROUNDING NOTE

PREPARED BY A. LYNN MILLER
1070 TECHNOLOGY DRIVE
N. VENICE, FL 34275
(941) 480-1600
REGISTRATION #29296

ECO window systems
ECO WINDOW SYSTEMS, LLC.
8502 N.W. 80th ST. MEDLEY, FL 33166
TEL. (305) 885-5299 FAX. (305) 885-5902

Series	Desc.	Title	Sheet	DWG No.	Drawn By	Date	Rev.
MULLION	ANCHOR DETAILS	ALUMINUM TUBE MULLIUONS	9 OF 9	MULLION-FPA	A. M.	9/27/2022	A

ANTHONY LYNN MILLER
LICENSE
No. 58705
STATE OF
FLORIDA
PROFESSIONAL ENGINEER
10/17/23

A. LYNN MILLER, P.E.
P.E.# 58705