Product Approval
USER: Public User

FL #	FL40097-R2
Application Type	Revision
Code Version	2023
Application Status	Approved
Comments	
Archived	☐
Product Manufacturer	Eco Window Systems
Address/Phone/Email	8502 NW 80th Street Suite 103 Medley, FL 33166 (305) 885-5299 jrosowski@pgtindustries.com
Authorized Signature	Jens Rosowski jrosowski@pgtindustries.com
Technical Representative	Lynn Miller, P.E.
Address/Phone/Email	1070 Technology Dr N Venice, FL 34275 (941) 486-0100 Ext 21142 lmiller@pgtindustries.com
Quality Assurance Representative	
Address/Phone/Email	
Category	Windows
Subcategory	Horizontal Slider
Compliance Method	Evaluation Report from a Florida Registered Architect or a Licensed Florida Professional Engineer ☐ Evaluation Report - Hardcopy Received
Florida Engineer or Architect Name who developed the Evaluation Report	A. Lynn Miller, P.E.
Florida License	PE-58705
Quality Assurance Entity	Keystone Certifications, Inc.
Quality Assurance Contract Expiration Date	12/31/2032
Validated By	Steven M. Urich, PE ☑ Validation Checklist - Hardcopy Received
Certificate of Independence	FL40097_R2_COI_Cert of Independence.pdf

Referenced Standard and Year (of Standard)

Standard	Year
TAS 201, 202 & 203	1994

Equivalence of Product Standards Certified By

Sections from the Code

Product Approval Method	Method 1 Option D
Date Submitted	10/13/2023
Date Validated	10/18/2023
Date Pending FBC Approval	10/25/2023
Date Approved	12/13/2023

Summary of Products

FL #	Model, Number or Name	Description
40097.1	Series 60 Horizontal Roller	Large Missile Impact Resistant, Aluminum Horizontal Roller Window
Limits of Use **Approved for use in HVHZ:** Yes **Approved for use outside HVHZ:** Yes **Impact Resistant:** Yes **Design Pressure:** N/A **Other:** Please see the enclosed documents for product performance information, anchorage details, and anchor type, size, and spacing information.		**Installation Instructions** FL40097_R2_II_HR60 - LMI REV A.pdf Verified By: A. Lynn Miller, P.E. PE-58705 Created by Independent Third Party: No **Evaluation Reports** FL40097_R2_AE_ECO HR60LMI ENG EVAL REV A.pdf Created by Independent Third Party: No
40097.2	Series 200 Horizontal Roller	Large Missile Impact Resistant, Aluminum Horizontal Roller Window
Limits of Use **Approved for use in HVHZ:** Yes **Approved for use outside HVHZ:** Yes **Impact Resistant:** Yes **Design Pressure:** N/A **Other:** Please see the enclosed documents for product performance information, anchorage details, and anchor type, size, and spacing information.		**Installation Instructions** FL40097_R2_II_HR200LM-FPA REV B.pdf Verified By: A. Lynn Miller, P.E. PE-58705 Created by Independent Third Party: No **Evaluation Reports** FL40097_R2_AE_ECO HR200LM ENG EVAL REV B.pdf Created by Independent Third Party: No
40097.3	Series 200 Horizontal Roller	Small Missile Impact Resistant, Aluminum Horizontal Roller Window
Limits of Use **Approved for use in HVHZ:** Yes **Approved for use outside HVHZ:** Yes **Impact Resistant:** Yes **Design Pressure:** N/A **Other:** Please see the enclosed documents for product performance information, anchorage details, and anchor type, size, and spacing information.		**Installation Instructions** FL40097_R2_II_HR200SM-FPA REV A.pdf Verified By: A. Lynn Miller, P.E. PE-58705 Created by Independent Third Party: No **Evaluation Reports** FL40097_R2_AE_ECO HR200SM ENG EVAL REV A.pdf Created by Independent Third Party: No
40097.4	Series 250 Horizontal Roller	Large Missile Impact Resistant, Aluminum Horizontal Roller Window
Limits of Use **Approved for use in HVHZ:** Yes **Approved for use outside HVHZ:** Yes **Impact Resistant:** Yes **Design Pressure:** N/A **Other:** Please see the enclosed documents for product performance information, anchorage details, and anchor type, size, and spacing information.		**Installation Instructions** FL40097_R2_II_HR250FPA - LMI REV A.pdf Verified By: A. Lynn Miller, P.E. PE-58705 Created by Independent Third Party: No **Evaluation Reports** FL40097_R2_AE_ECO HR250LMI ENG EVAL REV A.pdf Created by Independent Third Party: No
40097.5	Series 250 Horizontal Roller	Small Missile Impact Resistant, Aluminum Horizontal Roller Window
Limits of Use **Approved for use in HVHZ:** Yes **Approved for use outside HVHZ:** Yes **Impact Resistant:** Yes **Design Pressure:** N/A **Other:** Please see the enclosed documents for product performance information, anchorage details, and anchor type, size, and spacing information.		**Installation Instructions** FL40097_R2_II_HR250FPA - SMI REV A.pdf Verified By: A. Lynn Miller, P.E. PE-58705 Created by Independent Third Party: No **Evaluation Reports** FL40097_R2_AE_ECO HR250SMI ENG EVAL REV A.pdf Created by Independent Third Party: No

Back Next

The State of Florida is an AA/EEO employer. Copyright 2007-2013 State of Florida. :: Privacy Statement :: Accessibility Statement :: Refund Statement

Under Florida law, email addresses are public records. If you do not want your e-mail address released in response to a public-records request, do not send electronic mail to this entity. Instead, contact the office by phone or by traditional mail. If you have any questions, please contact 850.487.1395. *Pursuant to Section 455.275(1), Florida Statutes, effective October 1, 2012, licensees licensed under Chapter 455, F.S. must provide the Department with an email address if they have one. The emails provided may be used for official communication with the licensee. However email addresses are public record. If you do not wish to supply a personal address, please provide the Department with an email address which can be made available to the public. To determine if you are a licensee under Chapter 455, F.S., please click here .

Product Approval Accepts:

Credit Card Safe securityMETRICS

FLORIDA PRODUCT APPROVAL #40097

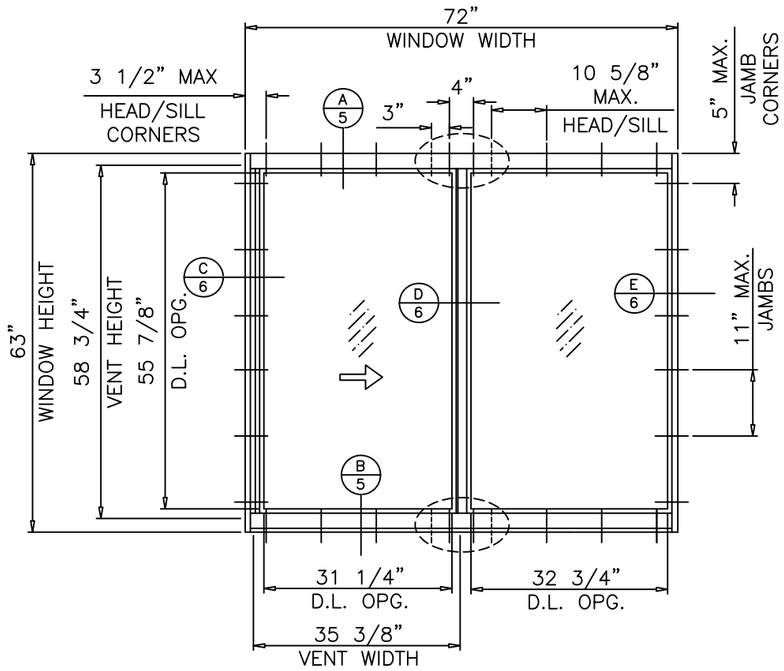

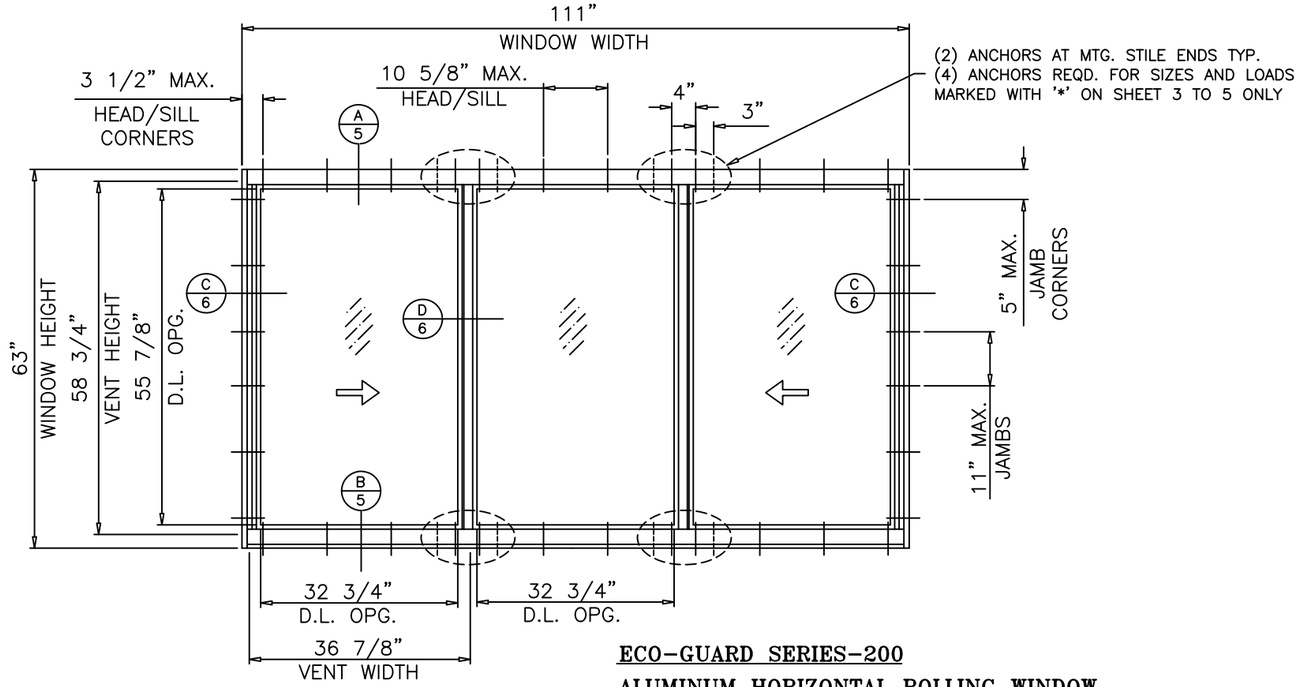

TYPICAL ELEVATIONS

THESE WINDOWS ARE RATED FOR LARGE & SMALL MISSILE IMPACT.

ECO-GUARD SERIES-200

ALUMINUM HORIZONTAL ROLLING WINDOW

DESIGN LOAD RATINGS FOR THESE WINDOWS TO BE AS PER CHARTS SHOWN IN SHEETS 3 TO 5.

APPROVAL APPLIES TO SINGLE UNITS OR SIDE BY SIDE COMBINATIONS OF H.R./H.R. OR HORIZONTAL ROLLING WITH OTHER WINDOW TYPES IN MODULES OF TWO OR MORE WINDOWS USING HVHZ FPA APPROVED MULLIONS IN BETWEEN.
LOWER DESIGN PRESSURE FROM WINDOWS OR MULLION APPROVAL WILL APPLY TO ENTIRE SYSTEM.

THIS PRODUCT HAS BEEN DESIGNED AND TESTED TO COMPLY WITH THE REQUIREMENTS OF THE FLORIDA BUILDING CODE INCLUDING HIGH VELOCITY HURRICANE ZONE (HVHZ).

SHUTTERS ARE NOT REQUIRED WHEN USED IN WIND-BORNE DEBRIS REGIONS. FOR INSULATED GLASS INSTALLATIONS ABOVE 30' IN THE HVHZ, THE OUTBOARD LITE (CAP) MUST BE TEMPERED.

1BY OR 2BY WOOD BUCKS & BUCK FASTENERS BY OTHERS, MUST BE DESIGNED AND INSTALLED ADEQUATELY TO TRANSFER APPLIED PRODUCT LOADS TO THE BUILDING STRUCTURE

ANCHORS SHALL BE CORROSION RESISTANT, SPACED AS SHOWN ON DETAILS AND INSTALLED PER MANUF'S INSTRUCTIONS. SPECIFIED EMBEDMENT TO BASE MATERIAL SHALL BE BEYOND WALL DRESSING OR STUCCO.

A LOAD DURATION INCREASE IS USED IN DESIGN OF ANCHORS INTO WOOD ONLY.

ALL SHIMS TO BE HIGH IMPACT, NON-METALLIC AND NON-COMPRESSIBLE.

MATERIALS INCLUDING BUT NOT LIMITED TO STEEL/METAL SCREWS, THAT COME INTO CONTACT WITH OTHER DISSIMILAR MATERIALS SHALL MEET THE REQUIREMENTS OF THE FLORIDA BLDG. CODE & ADOPTED STANDARDS.

THIS PRODUCT APPROVAL IS GENERIC AND DOES NOT PROVIDE INFORMATION FOR A SITE SPECIFIC PROJECT, i.e. LIFE SAFETY OF THIS PRODUCT, ADEQUACY OF STRUCTURE RECEIVING THIS PRODUCT AND SEALING AROUND OPENING FOR WATER INFILTRATION RESISTANCE ETC.
CONDITIONS NOT SHOWN IN THIS DRAWING ARE TO BE ANALYZED SEPARATELY, AND TO BE REVIEWED BY BUILDING OFFICIAL

DESIGN LOAD SHOWN ARE BASE ON 'ALLOWABLE STRESS DESIGN (ASD)'.

Revision:
REVISED TABLE FORMAT, ADDED DP TABLE
ROUNDING AND ANCHOR HEAD TYPE NOTES, REMOVED SILICONE AND BACKSTOP ON INSTALL DETAIL

PREPARED BY A. LYNN MILLER
1070 TECHNOLOGY DRIVE
N. VENICE, FL 34275
(941) 480-1600
REGISTRATION #29296

windows systems
ECO WINDOW SYSTEMS, LLC.
8502 N.W. 80th ST. MEDLEY, FL 33166
TEL. (305) 885-5299 FAX. (305) 885-5902

Series	SERIES 200
Desc.	GENERAL NOTES, ELEVATION, & GLASS TYPES
Title	ECO-GUARD SERIES-200 ALUM HORZ. ROLLING WDW (L.M.I.)
Sheet	1 OF 11
DWG No.	HR200LM-FPA
Drawn By	HONG C.
Date	7/15/2022
Rev.	B

ANTHONY LYNN MILLER
LICENSE
No. 58705
A. Lynn Miller
10/6/23
STATE OF FLORIDA
PROFESSIONAL ENGINEER

A. LYNN MILLER, P.E.
P.E.# 58705

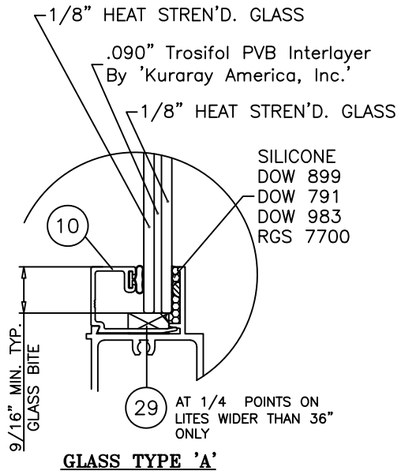

GLASS TYPE 'A'

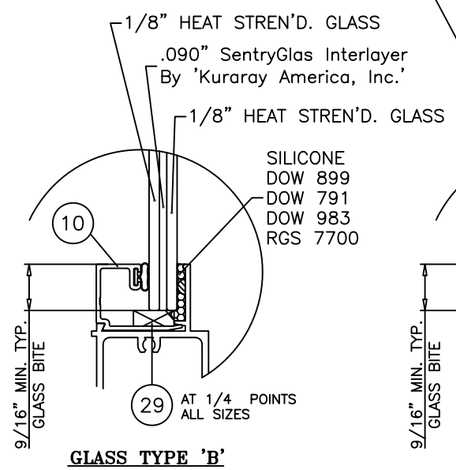

GLASS TYPE 'B'

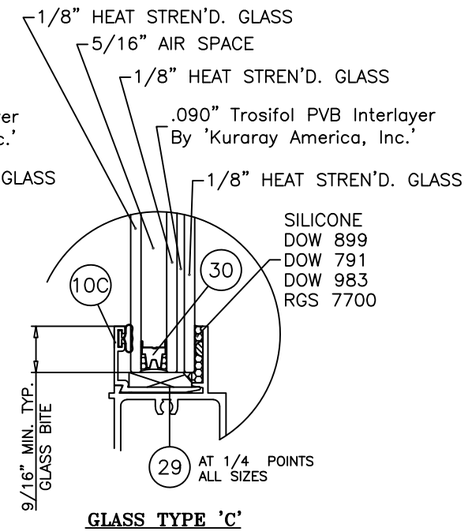

GLASS TYPE 'C'

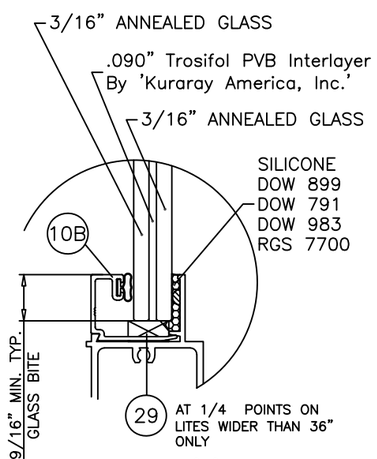

GLASS TYPE 'D'

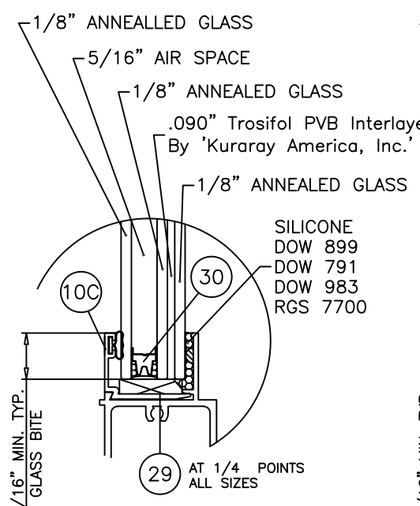

GLASS TYPE 'E'

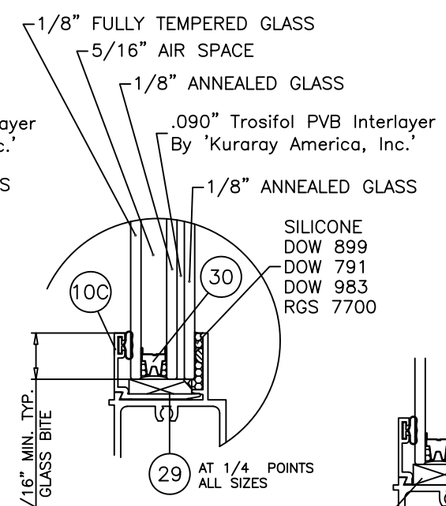

GLASS TYPE 'F'

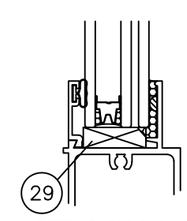

SETTING BLOCKS AT
LAMI. GLASS AND INSUL.
LAMI. GLASS
NOTCH GLAZING BEAD
LEG TO CLEAR BLOCKS

GLAZING OPTIONS

Revision:
REVISED TABLE FORMAT, ADDED DP TABLE ROUNDING AND ANCHOR HEAD TYPE NOTES, REMOVED SILICONE AND BACKSTOP ON INSTALL DETAIL

PREPARED BY A. LYNN MILLER
1070 TECHNOLOGY DRIVE
N. VENICE, FL 34275
(941) 480-1600
REGISTRATION #29296

ECO windows systems
ECO WINDOW SYSTEMS, LLC.
8502 N.W. 80th ST. MEDLEY, FL 33166
TEL. (305) 885-5299 FAX. (305) 885-5902

Series	Desc.	Sheet	DWG No.	Drawn By	Date	Rev.
SERIES 200	GLAZING OPTIONS	2 OF 11	HR200LM-FPA	HONG C.	7/15/2022	B

Title: ECO-GUARD SERIES-200 ALUM HORZ. ROLLING WDW (L.M.I.)

ANTHONY LYNN MILLER
LICENSE
No. 58705
A. Lynn Miller
10/6/23
STATE OF
FLORIDA
PROFESSIONAL ENGINEER

A. LYNN MILLER, P.E.
P.E.# 58705

Glass Type A w/o Reinforcement		Design Load Capacity - PSF (XO or OX Sizes) Window Height (in.) / Jamb Anchor Quantity															
Window Width (in.)	Head/Sill Anchor Qty.	24"		26"		36"		38-3/8"		48"		50-5/8"		60"		63"	
		3		3		4		4		5		5		6		6	
24"	4	+70.0	-80.0	+70.0	-80.0	+70.0	-80.0	+70.0	-80.0	+70.0	-80.0	+70.0	-80.0	+70.0	-80.0	+70.0	-80.0
26-1/2"	4	+70.0	-80.0	+70.0	-80.0	+70.0	-80.0	+70.0	-80.0	+70.0	-80.0	+70.0	-80.0	+70.0	-80.0	+70.0	-80.0
36"	4	+70.0	-80.0	+70.0	-80.0	+70.0	-80.0	+70.0	-80.0	+70.0	-80.0	+70.0	-80.0	+70.0	-80.0	+70.0	-80.0
	4	+70.0	-80.0	+70.0	-80.0	+70.0	-80.0	+70.0	-80.0	+70.0	-80.0	+70.0	-80.0	+70.0	-77.5	+70.0	-77.5
48"	6	+70.0	-80.0	+70.0	-80.0	+70.0	-80.0	+70.0	-80.0	+70.0	-80.0	+70.0	-80.0	+70.0	-70.0	+70.0	-70.0
53-1/8"	6	+70.0	-80.0	+70.0	-80.0	+70.0	-80.0	+70.0	-80.0	+70.0	-80.0	+70.0	-80.0	+70.0	-70.0	+70.0	-70.0
60"	6	+70.0	-80.0	+70.0	-80.0	+70.0	-80.0	+70.0	-80.0	+70.0	-80.0	+70.0	-80.0	+70.0	-70.0	+70.0	-70.0
72"	8	+70.0	-80.0	+70.0	-80.0	+70.0	-80.0	+70.0	-80.0	+70.0	-80.0	+70.0	-80.0	+70.0	-70.0	+70.0	-70.0
74"	8	+70.0	-80.0	+70.0	-80.0	+70.0	-80.0	+70.0	-80.0	+70.0	-80.0	+70.0	-80.0				

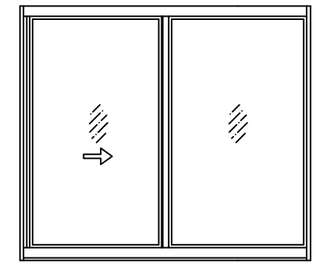

'XO OR OX'

Glass Types D, E, & F w/o Reinforcement			Design Load Capacity - PSF (XO or OX Sizes) Window Height (in.) / Jamb Anchor Quantity																			
Window Width (in.)	Head/Sill Anchor Qty.	Glass Type	24"		26"		36"		38-3/8"		48"		50-5/8"		60"		61-1/4"		63"	
			3		3		4		4		5		5		6		6		6	
24"	4	D	+70.0	-80.0	+70.0	-80.0	+70.0	-80.0	+70.0	-80.0	+70.0	-80.0	+70.0	-80.0	+70.0	-80.0	+70.0	-80.0	+70.0	-80.0
		E	+70.0	-80.0	+70.0	-80.0	+70.0	-80.0	+70.0	-80.0	+70.0	-80.0	+70.0	-80.0	+70.0	-80.0	+70.0	-80.0	+70.0	-80.0
		F	+70.0	-80.0	+70.0	-80.0	+70.0	-80.0	+70.0	-80.0	+70.0	-80.0	+70.0	-80.0	+70.0	-80.0	+70.0	-80.0	+70.0	-80.0
26-1/2"	4	D	+70.0	-80.0	+70.0	-80.0	+70.0	-80.0	+70.0	-80.0	+70.0	-80.0	+70.0	-80.0	+70.0	-80.0	+70.0	-80.0	+70.0	-80.0
		E	+70.0	-80.0	+70.0	-80.0	+70.0	-80.0	+70.0	-80.0	+70.0	-80.0	+70.0	-80.0	+70.0	-80.0	+70.0	-80.0	+70.0	-80.0
		F	+70.0	-80.0	+70.0	-80.0	+70.0	-80.0	+70.0	-80.0	+70.0	-80.0	+70.0	-80.0	+70.0	-80.0	+70.0	-80.0	+70.0	-80.0
36"	4	D	+70.0	-80.0	+70.0	-80.0	+70.0	-80.0	+70.0	-80.0	+70.0	-80.0	+70.0	-80.0	+70.0	-80.0	+70.0	-80.0	+70.0	-80.0
		E	+70.0	-80.0	+70.0	-80.0	+70.0	-80.0	+70.0	-80.0	+70.0	-80.0	+70.0	-80.0	+70.0	-80.0	+70.0	-80.0	+70.0	-80.0
		F	+70.0	-80.0	+70.0	-80.0	+70.0	-80.0	+70.0	-80.0	+70.0	-80.0	+70.0	-80.0	+70.0	-80.0	+70.0	-80.0	+70.0	-80.0
37"	4	D	+70.0	-80.0	+70.0	-80.0	+70.0	-80.0	+70.0	-80.0	+70.0	-80.0	+70.0	-80.0	+70.0	-80.0	+70.0	-80.0	+70.0	-80.0
		E	+70.0	-80.0	+70.0	-80.0	+70.0	-80.0	+70.0	-80.0	+70.0	-80.0	+70.0	-80.0	+70.0	-80.0	+70.0	-80.0	+70.0	-80.0
		F	+70.0	-80.0	+70.0	-80.0	+70.0	-80.0	+70.0	-80.0	+70.0	-80.0	+70.0	-80.0	+70.0	-80.0	+70.0	-80.0	+70.0	-80.0
48"	6	D	+70.0	-80.0	+70.0	-80.0	+70.0	-80.0	+70.0	-80.0	+70.0	-80.0	+70.0	-80.0	+70.0	-80.0	+70.0	-80.0	+70.0	-80.0
		E	+70.0	-80.0	+70.0	-80.0	+70.0	-80.0	+70.0	-80.0	+70.0	-80.0	+70.0	-80.0	+70.0	-80.0	+70.0	-80.0	+70.0	-80.0
		F	+70.0	-80.0	+70.0	-80.0	+70.0	-80.0	+70.0	-80.0	+70.0	-80.0	+70.0	-80.0	+70.0	-80.0	+70.0	-80.0	+70.0	-80.0
53-1/8"	6	D	+70.0	-80.0	+70.0	-80.0	+70.0	-80.0	+70.0	-80.0	+70.0	-80.0	+70.0	-80.0	+70.0	-80.0	+70.0	-80.0	+70.0	-80.0
		E	+70.0	-80.0	+70.0	-80.0	+70.0	-80.0	+70.0	-80.0	+70.0	-80.0	+70.0	-80.0	+70.0	-80.0	+70.0	-80.0	+70.0	-80.0
		F	+70.0	-80.0	+70.0	-80.0	+70.0	-80.0	+70.0	-80.0	+70.0	-80.0	+70.0	-80.0	+70.0	-80.0	+70.0	-80.0	+70.0	-80.0
60"	6	D	+70.0	-80.0	+70.0	-80.0	+70.0	-80.0	+70.0	-80.0	+70.0	-80.0	+70.0	-80.0	+70.0	-80.0	+70.0	-80.0	+70.0	-80.0
		E	+70.0	-80.0	+70.0	-80.0	+70.0	-80.0	+70.0	-80.0	+70.0	-80.0	+70.0	-80.0	+70.0	-80.0	+69.2	-69.2	+67.0	-67.0
		F	+70.0	-80.0	+70.0	-80.0	+70.0	-80.0	+70.0	-80.0	+70.0	-80.0	+70.0	-80.0	+70.0	-80.0	+70.0	-76.9	+70.0	-75.7
72"	8	D	+70.0	-80.0	+70.0	-80.0	+70.0	-80.0	+70.0	-80.0	+70.0	-80.0	+70.0	-80.0	+70.0	-80.0	+70.0	-80.0	+70.0	-80.0
		E	+70.0	-80.0	+70.0	-80.0	+70.0	-80.0	+70.0	-80.0	+70.0	-80.0	+70.0	-80.0	+70.0	-72.5	+69.2	-69.2	+67.0	-67.0
		F	+70.0	-80.0	+70.0	-80.0	+70.0	-80.0	+70.0	-80.0	+70.0	-80.0	+70.0	-80.0	+70.0	-80.0	+70.0	-76.9	+70.0	-75.7
74"	8	D	+70.0	-80.0	+70.0	-80.0	+70.0	-80.0	+70.0	-80.0	+70.0	-80.0	+70.0	-80.0	+70.0	-80.0	+70.0	-80.0		
		E	+70.0	-80.0	+70.0	-80.0	+70.0	-80.0	+70.0	-80.0	+70.0	-80.0	+70.0	-80.0	+69.2	-69.2	+69.2	-69.2		
		F	+70.0	-80.0	+70.0	-80.0	+70.0	-80.0	+70.0	-80.0	+70.0	-80.0	+70.0	-80.0	+70.0	-76.9	+70.0	-76.9		

FOR SIZES NOT SHOWN, ROUND UP TO THE NEXT AVAILABLE WIDTH OR HEIGHT DIMENSION SHOWN ON THE TABLE.

ALL EXTERIOR (+) LOADS SHOWN ON THIS SHEET ARE FROM WINDOWS WITH ADD–ON RISER AT FRAME SILL
FOR STD. SILL (NO RISER) LIMIT EXT.(+) LOADS TO 67.0 PSF
SEE SHEET ABOVE FOR DETAILS.

NOTE:
GLASS CAPACITIES ON THIS SHEET ARE BASED ON ASTM E1300–09 (3 SEC GUSTS)

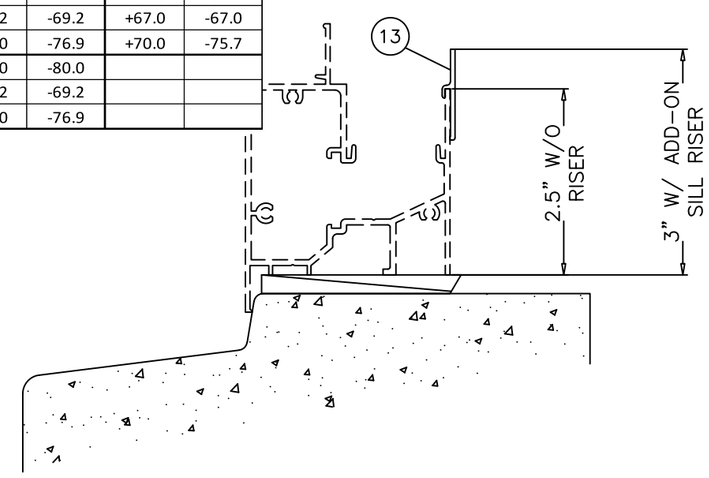

Revision:
REVISED TABLE FORMAT, ADDED DP TABLE
ROUNDING AND ANCHOR HEAD TYPE NOTES, REMOVED SILICONE AND BACKSTOP ON INSTALL DETAIL

PREPARED BY A. LYNN MILLER
1070 TECHNOLOGY DRIVE
N. VENICE, FL 34275
(941) 480-1600
REGISTRATION #29296

windows systems
ECO WINDOW SYSTEMS, LLC.
8502 N.W. 80th ST. MEDLEY, FL 33166
TEL. (305) 885-5299 FAX. (305) 885-5902

Title: ECO-GUARD SERIES-200 ALUM HORZ. ROLLING WDW (L.M.I.)
Date: 7/15/2022
Drawn By: HONG C.
Desc.: XO/OX CONFIGURATION DESIGN LOADS
DWG No.: HR200LM-FPA
Rev.: B
Sheet: 3 OF 11
Series: SERIES 200

ANTHONY LYNN MILLER
LICENSE
No. 58705
A. Lynn Miller
10/6/23
STATE OF FLORIDA
PROFESSIONAL ENGINEER
A. LYNN MILLER, P.E.
P.E.# 58705

Glass Types B & C w/ Reinforcement			Design Load Capacity - PSF (XO or OX Sizes) Window Height (in.) / Jamb Anchor Quantity															
Window Width (in.)	Head/Sill Anchor Qty.	Glass Type	24"		26"		36"		38-3/8"		48"		50-5/8"		60"		63"	
			3		3		4		4		5		5		6		6	
24"	4	B	+80.0	-90.0	+80.0	-90.0	+80.0	-90.0	+80.0	-90.0	+80.0	-90.0	+80.0	-90.0	+80.0	-90.0	+80.0	-90.0
		C	+70.0	-80.0	+70.0	-80.0	+70.0	-80.0	+70.0	-80.0	+70.0	-80.0	+70.0	-80.0	+70.0	-80.0	+70.0	-80.0
26-1/2"	4	B	+80.0	-90.0	+80.0	-90.0	+80.0	-90.0	+80.0	-90.0	+80.0	-90.0	+80.0	-90.0	+80.0	-90.0	+80.0	-90.0
		C	+70.0	-80.0	+70.0	-80.0	+70.0	-80.0	+70.0	-80.0	+70.0	-80.0	+70.0	-80.0	+70.0	-80.0	+70.0	-80.0
36"	4	B	+80.0	-90.0	+80.0	-90.0	+80.0	-90.0	+80.0	-90.0	+80.0	-90.0	+80.0	-90.0	+80.0	-90.0	+80.0	-90.0
		C	+70.0	-80.0	+70.0	-80.0	+70.0	-80.0	+70.0	-80.0	+70.0	-80.0	+70.0	-80.0	+70.0	-80.0	+70.0	-80.0
37"	4	B	+80.0	-90.0	+80.0	-90.0	+80.0	-90.0	+80.0	-90.0	+80.0	-90.0	+80.0	-90.0	+80.0	-90.0	+80.0	-90.0
		C	+70.0	-80.0	+70.0	-80.0	+70.0	-80.0	+70.0	-80.0	+70.0	-80.0	+70.0	-80.0	+70.0	-80.0	+70.0	-80.0
48"	6	B	+80.0	-90.0	+80.0	-90.0	+80.0	-90.0	+80.0	-90.0	+80.0	-90.0	+80.0	-90.0	+80.0	-90.0	+80.0	-90.0
		C	+70.0	-80.0	+70.0	-80.0	+70.0	-80.0	+70.0	-80.0	+70.0	-80.0	+70.0	-80.0	+70.0	-80.0	+70.0	-80.0
53-1/8"	6	B	+80.0	-90.0	+80.0	-90.0	+80.0	-90.0	+80.0	-90.0	+80.0	-90.0	+80.0	-90.0	+80.0	-90.0	+80.0	-90.0
		C	+70.0	-80.0	+70.0	-80.0	+70.0	-80.0	+70.0	-80.0	+70.0	-80.0	+70.0	-80.0	+70.0	-80.0	+70.0	-80.0
60"	6	B	+80.0	-90.0	+80.0	-90.0	+80.0	-90.0	+80.0	-90.0	+80.0	-90.0	+80.0	-90.0	+80.0	-90.0	+80.0	-80.4*
		C	+70.0	-80.0	+70.0	-80.0	+70.0	-80.0	+70.0	-80.0	+70.0	-80.0	+70.0	-80.0	+70.0	-80.0	+70.0	-80.0
72"	8	B	+80.0	-90.0	+80.0	-90.0	+80.0	-90.0	+80.0	-90.0	+80.0	-90.0	+80.0	-90.0	+80.0	-87.6*	+80.0	-80.4*
		C	+70.0	-80.0	+70.0	-80.0	+70.0	-80.0	+70.0	-80.0	+70.0	-80.0	+70.0	-80.0	+70.0	-80.0	+70.0	-80.0
74"	8	B	+80.0	-90.0	+80.0	-90.0	+80.0	-90.0	+80.0	-90.0	+80.0	-90.0	+80.0	-90.0				
		C	+70.0	-80.0	+70.0	-80.0	+70.0	-80.0	+70.0	-80.0	+70.0	-80.0	+70.0	-80.0				

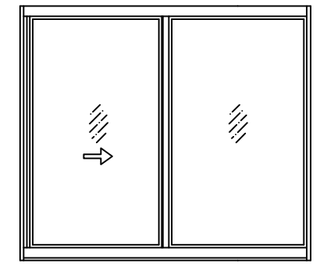

'XO OR OX'

FOR SIZES NOT SHOWN, ROUND UP TO THE NEXT AVAILABLE WIDTH OR HEIGHT DIMENSION SHOWN ON THE TABLE.

(4) ANCHORS REQUIRED AT MEETING RAIL CLUSTERS FOR SIZES AND LOADS MARKED WITH '*'. SEE ELEVATION ON SHEET 1.

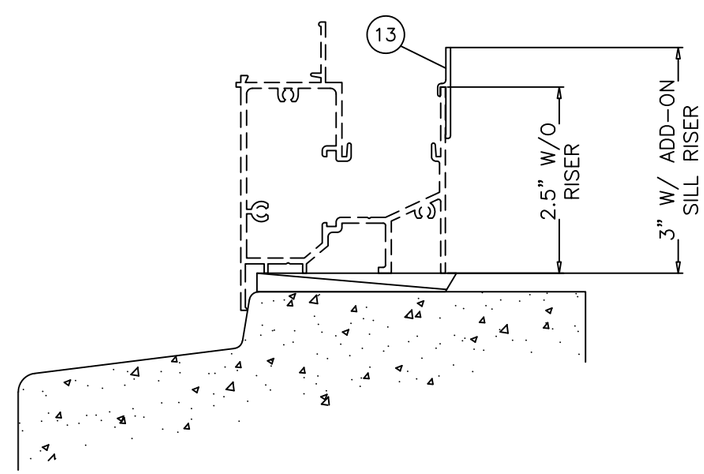

ALL EXTERIOR (+) LOADS SHOWN ON THIS SHEET ARE FROM WINDOWS WITH ADD-ON RISER AT FRAME SILL FOR STD. SILL (NO RISER) LIMIT EXT.(+) LOADS TO 67.0 PSF SEE SHEET ABOVE FOR DETAILS.

NOTE:
GLASS CAPACITIES ON THIS SHEET ARE BASED ON ASTM E1300-09 (3 SEC GUSTS)

Revision:
REVISED TABLE FORMAT, ADDED DP TABLE ROUNDING AND ANCHOR HEAD TYPE NOTES, REMOVED SILICONE AND BACKSTOP ON INSTALL DETAIL

PREPARED BY A. LYNN MILLER
1070 TECHNOLOGY DRIVE
N. VENICE, FL 34275
(941) 480-1600
REGISTRATION #29296

ECO windows systems
ECO WINDOW SYSTEMS, LLC.
8502 N.W. 80th ST. MEDLEY, FL 33166
TEL. (305) 885-5299 FAX. (305) 885-5902

Title: ECO-GUARD SERIES-200 ALUM HORZ. ROLLING WDW (L.M.I.)
Desc.: XO/OX CONFIGURATION DESIGN LOADS
Series: SERIES 200
Sheet: 4 OF 11
DWG No.: HR200LM-FPA
Rev.: B
Date: 7/15/2022
Drawn By: HONG C.

ANTHONY LYNN MILLER
LICENSE
No. 58705
A. Lynn Miller
10/6/23
STATE OF FLORIDA
PROFESSIONAL ENGINEER

A. LYNN MILLER, P.E.
P.E.# 58705

Glass Types A, D, E, & F w/o Reinforcement			Design Load Capacity - PSF (XOX 1/3-1/3-1/3 Sizes) Window Height (in.) / Jamb Anchor Quantity															
Window Width (in.)	Head/Sill Anchor Qty.	Glass Type	24"		26"		36"		38-3/8"		48"		50-5/8"		60"		63"	
			3		3		4		4		5		5		6		6	
72"	9	A	+70.0	-80.0	+70.0	-80.0	+70.0	-80.0	+70.0	-80.0	+70.0	-80.0	+70.0	-80.0	+70.0	-70.0	+70.0	-70.0
		D	+70.0	-80.0	+70.0	-80.0	+70.0	-80.0	+70.0	-80.0	+70.0	-80.0	+70.0	-80.0	+70.0	-80.0	+70.0	-80.0
		E	+70.0	-80.0	+70.0	-80.0	+70.0	-80.0	+70.0	-80.0	+70.0	-80.0	+70.0	-80.0	+70.0	-80.0	+70.0	-80.0
		F	+70.0	-80.0	+70.0	-80.0	+70.0	-80.0	+70.0	-80.0	+70.0	-80.0	+70.0	-80.0	+70.0	-80.0	+70.0	-80.0
74"	9	A	+70.0	-80.0	+70.0	-80.0	+70.0	-80.0	+70.0	-80.0	+70.0	-80.0	+70.0	-80.0	+70.0	-70.0	+70.0	-70.0
		D	+70.0	-80.0	+70.0	-80.0	+70.0	-80.0	+70.0	-80.0	+70.0	-80.0	+70.0	-80.0	+70.0	-80.0	+70.0	-80.0
		E	+70.0	-80.0	+70.0	-80.0	+70.0	-80.0	+70.0	-80.0	+70.0	-80.0	+70.0	-80.0	+70.0	-80.0	+70.0	-80.0
		F	+70.0	-80.0	+70.0	-80.0	+70.0	-80.0	+70.0	-80.0	+70.0	-80.0	+70.0	-80.0	+70.0	-80.0	+70.0	-80.0
84"	9	A	+70.0	-80.0	+70.0	-80.0	+70.0	-80.0	+70.0	-80.0	+70.0	-80.0	+70.0	-80.0	+70.0	-70.0	+70.0	-70.0
		D	+70.0	-80.0	+70.0	-80.0	+70.0	-80.0	+70.0	-80.0	+70.0	-80.0	+70.0	-80.0	+70.0	-80.0	+70.0	-80.0
		E	+70.0	-80.0	+70.0	-80.0	+70.0	-80.0	+70.0	-80.0	+70.0	-80.0	+70.0	-80.0	+70.0	-80.0	+70.0	-70.5
		F	+70.0	-80.0	+70.0	-80.0	+70.0	-80.0	+70.0	-80.0	+70.0	-80.0	+70.0	-80.0	+70.0	-80.0	+70.0	-78.3
96"	12	A	+70.0	-80.0	+70.0	-80.0	+70.0	-80.0	+70.0	-80.0	+70.0	-80.0	+70.0	-80.0	+70.0	-70.0	+70.0	-70.0
		D	+70.0	-80.0	+70.0	-80.0	+70.0	-80.0	+70.0	-80.0	+70.0	-80.0	+70.0	-80.0	+70.0	-80.0	+70.0	-80.0
		E	+70.0	-80.0	+70.0	-80.0	+70.0	-80.0	+70.0	-80.0	+70.0	-80.0	+70.0	-80.0	+70.0	-80.0	+70.0	-70.5
		F	+70.0	-80.0	+70.0	-80.0	+70.0	-80.0	+70.0	-80.0	+70.0	-80.0	+70.0	-80.0	+70.0	-80.0	+70.0	-78.3
106-1/4"	12	A	+70.0	-80.0	+70.0	-80.0	+70.0	-80.0	+70.0	-80.0	+70.0	-80.0	+70.0	-80.0	+70.0	-70.0	+70.0	-70.0
		D	+70.0	-80.0	+70.0	-80.0	+70.0	-80.0	+70.0	-80.0	+70.0	-80.0	+70.0	-80.0	+70.0	-80.0	+70.0	-80.0
		E	+70.0	-80.0	+70.0	-80.0	+70.0	-80.0	+70.0	-80.0	+70.0	-80.0	+70.0	-80.0	+70.0	-73.9	+70.0	-70.5
		F	+70.0	-80.0	+70.0	-80.0	+70.0	-80.0	+70.0	-80.0	+70.0	-80.0	+70.0	-80.0	+70.0	-80.0	+70.0	-78.3
108"	12	A	+70.0	-80.0	+70.0	-80.0	+70.0	-80.0	+70.0	-80.0	+70.0	-80.0	+70.0	-80.0	+70.0	-70.0	+70.0	-70.0
		D	+70.0	-80.0	+70.0	-80.0	+70.0	-80.0	+70.0	-80.0	+70.0	-80.0	+70.0	-80.0	+70.0	-80.0	+70.0	-80.0
		E	+70.0	-80.0	+70.0	-80.0	+70.0	-80.0	+70.0	-80.0	+70.0	-80.0	+70.0	-80.0	+70.0	-73.9	+68.0	-68.0
		F	+70.0	-80.0	+70.0	-80.0	+70.0	-80.0	+70.0	-80.0	+70.0	-80.0	+70.0	-80.0	+70.0	-80.0	+70.0	-75.6
111"	12	A	+70.0	-80.0	+70.0	-80.0	+70.0	-80.0	+70.0	-80.0	+70.0	-80.0	+70.0	-80.0	+70.0	-70.0	+70.0	-70.0
		D	+70.0	-80.0	+70.0	-80.0	+70.0	-80.0	+70.0	-80.0	+70.0	-80.0	+70.0	-80.0	+70.0	-80.0	+70.0	-80.0
		E	+70.0	-80.0	+70.0	-80.0	+70.0	-80.0	+70.0	-80.0	+70.0	-80.0	+70.0	-80.0	+68.0	-68.0	+68.0	-68.0
		F	+70.0	-80.0	+70.0	-80.0	+70.0	-80.0	+70.0	-80.0	+70.0	-80.0	+70.0	-80.0	+70.0	-75.6	+70.0	-75.6

Glass Types B & C w/ Reinforcement			Design Load Capacity - PSF (XOX 1/3-1/3-1/3 Sizes) Window Height (in.) / Jamb Anchor Quantity															
Window Width (in.)	Head/Sill Anchor Qty.	Glass Type	24"		26"		36"		38-3/8"		48"		50-5/8"		60"		63"	
			3		3		4		4		5		5		6		6	
72"	9	B	+80.0	-90.0	+80.0	-90.0	+80.0	-90.0	+80.0	-90.0	+80.0	-90.0	+80.0	-90.0	+80.0	-90.0	+80.0	-90.0
		C	+70.0	-80.0	+70.0	-80.0	+70.0	-80.0	+70.0	-80.0	+70.0	-80.0	+70.0	-80.0	+70.0	-80.0	+70.0	-80.0
74"	9	B	+80.0	-90.0	+80.0	-90.0	+80.0	-90.0	+80.0	-90.0	+80.0	-90.0	+80.0	-90.0	+80.0	-90.0	+80.0	-90.0
		C	+70.0	-80.0	+70.0	-80.0	+70.0	-80.0	+70.0	-80.0	+70.0	-80.0	+70.0	-80.0	+70.0	-80.0	+70.0	-80.0
84"	9	B	+80.0	-90.0	+80.0	-90.0	+80.0	-90.0	+80.0	-90.0	+80.0	-90.0	+80.0	-90.0	+80.0	-90.0	+80.0	82.6*
		C	+70.0	-80.0	+70.0	-80.0	+70.0	-80.0	+70.0	-80.0	+70.0	-80.0	+70.0	-80.0	+70.0	-80.0	+70.0	-80.0
96"	12	B	+80.0	-90.0	+80.0	-90.0	+80.0	-90.0	+80.0	-90.0	+80.0	-90.0	+80.0	-90.0	+80.0	-90.0*	+80.0	82.6*
		C	+70.0	-80.0	+70.0	-80.0	+70.0	-80.0	+70.0	-80.0	+70.0	-80.0	+70.0	-80.0	+70.0	-80.0	+70.0	-80.0
106-1/4"	12	B	+80.0	-90.0	+80.0	-90.0	+80.0	-90.0	+80.0	-90.0	+80.0	-90.0	+80.0	-90.0	+80.0	-87.6*	+80.0	82.6*
		C	+70.0	-80.0	+70.0	-80.0	+70.0	-80.0	+70.0	-80.0	+70.0	-80.0	+70.0	-80.0	+70.0	-80.0	+70.0	-80.0
108"	12	B	+80.0	-90.0	+80.0	-90.0	+80.0	-90.0	+80.0	-90.0	+80.0	-90.0	+80.0	-90.0	+80.0	-87.6*	+80.0	80.4*
		C	+70.0	-80.0	+70.0	-80.0	+70.0	-80.0	+70.0	-80.0	+70.0	-80.0	+70.0	-80.0	+70.0	-80.0	+70.0	-80.0
111"	12	B	+80.0	-90.0	+80.0	-90.0	+80.0	-90.0	+80.0	-90.0	+80.0	-90.0	+80.0	-90.0	+80.0	80.4*	+80.0	80.4*
		C	+70.0	-80.0	+70.0	-80.0	+70.0	-80.0	+70.0	-80.0	+70.0	-80.0	+70.0	-80.0	+70.0	-80.0	+70.0	-80.0

FOR SIZES NOT SHOWN, ROUND UP TO THE NEXT AVAILABLE WIDTH OR HEIGHT DIMENSION SHOWN ON THE TABLE.

(4) ANCHORS REQUIRED AT MEETING RAIL CLUSTERS FOR SIZES AND LOADS MARKED WITH '*'. SEE ELEVATION ON SHEET 1.

NOTE:
GLASS CAPACITIES ON THIS SHEET ARE BASED ON ASTM E1300–09 (3 SEC GUSTS)

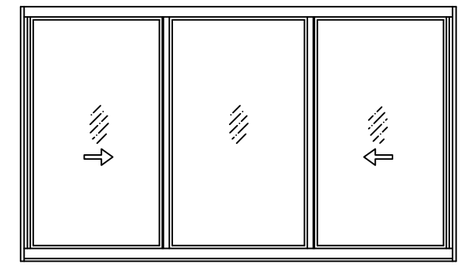

OPERATING VENTS TO BE 1/3 OF THE WINDOW WIDTH

'XOX'

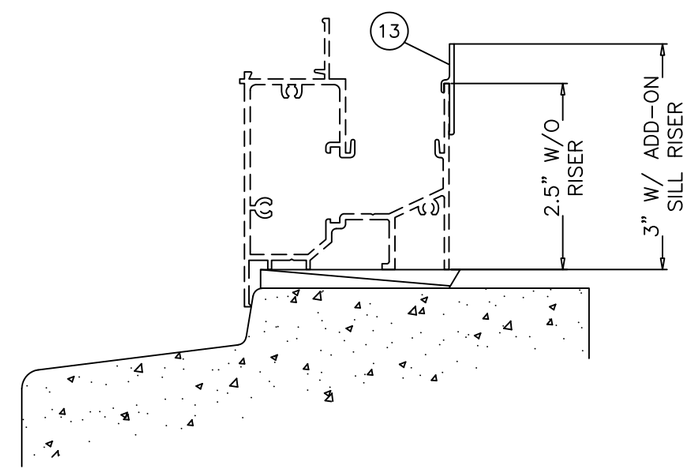

ALL EXTERIOR (+) LOADS SHOWN ON THIS SHEET ARE FROM WINDOWS WITH ADD–ON RISER AT FRAME SILL
FOR STD. SILL (NO RISER) LIMIT EXT.(+) LOADS TO 67.0 PSF
SEE SHEET ABOVE FOR DETAILS.

Revision:
REVISED TABLE FORMAT, ADDED DP TABLE
ROUNDING AND ANCHOR HEAD TYPE NOTES, REMOVED SILICONE AND BACKSTOP ON INSTALL DETAIL

PREPARED BY A. LYNN MILLER
1070 TECHNOLOGY DRIVE
N. VENICE, FL 34275
(941) 480-1600
REGISTRATION #29296

windows systems
ECO WINDOW SYSTEMS, LLC.
8502 N.W. 80th ST. MEDLEY, FL 33166
TEL. (305) 885-5299 FAX. (305) 885-5902

Title	ECO-GUARD SERIES-200 ALUM HORZ. ROLLING WDW (L.M.I.)
Date	7/15/2022
Drawn By	HONG C.
Desc.	XOX CONFIGURATION DESIGN LOADS
DWG No.	HR200LM-FPA
Rev.	B
Sheet	5 OF 11
Series	SERIES 200

ANTHONY LYNN MILLER
LICENSE
No. 58705
A. Lynn Miller
10/6/23
STATE OF FLORIDA
PROFESSIONAL ENGINEER
A. LYNN MILLER, P.E.
P.E.# 58705

Glass Types A, D, E, & F w/o Reinforcement			Design Load Capacity - PSF (XOX 1/4-1/2-1/4 Sizes) Window Height (in.) / Jamb Anchor Quantity															
Window Width (in.)	Head/Sill Anchor Qty.	Glass Type	24"		26"		36"		38-3/8"		48"		50-5/8"		60"		63"	
			3		3		4		4		5		5		6		6	
72"	9	A	+70.0	-80.0	+70.0	-80.0	+70.0	-80.0	+70.0	-80.0	+70.0	-80.0	+70.0	-80.0	+70.0	-70.0	+70.0	-70.0
		D	+70.0	-80.0	+70.0	-80.0	+70.0	-80.0	+70.0	-80.0	+70.0	-80.0	+70.0	-80.0	+70.0	-80.0	+70.0	-80.0
		E	+70.0	-80.0	+70.0	-80.0	+70.0	-80.0	+70.0	-80.0	+70.0	-80.0	+70.0	-80.0	+70.0	-76.3	+70.0	-70.4
		F	+70.0	-80.0	+70.0	-80.0	+70.0	-80.0	+70.0	-80.0	+70.0	-80.0	+70.0	-80.0	+70.0	-80.0	+70.0	-78.2
74"	9	A	+70.0	-80.0	+70.0	-80.0	+70.0	-80.0	+70.0	-80.0	+70.0	-80.0	+70.0	-80.0	+70.0	-70.0	+70.0	-70.0
		D	+70.0	-80.0	+70.0	-80.0	+70.0	-80.0	+70.0	-80.0	+70.0	-80.0	+70.0	-80.0	+70.0	-80.0	+70.0	-80.0
		E	+70.0	-80.0	+70.0	-80.0	+70.0	-80.0	+70.0	-80.0	+70.0	-80.0	+70.0	-80.0	+70.0	-70.4	+70.0	-70.4
		F	+70.0	-80.0	+70.0	-80.0	+70.0	-80.0	+70.0	-80.0	+70.0	-80.0	+70.0	-80.0	+70.0	-78.2	+70.0	-78.2
84"	9	A	+70.0	-80.0	+70.0	-80.0	+70.0	-80.0	+70.0	-70.0	+70.0	-70.0						
		D	+70.0	-80.0	+70.0	-80.0	+70.0	-80.0	+70.0	-80.0	+70.0	-80.0						
		E	+70.0	-80.0	+70.0	-80.0	+70.0	-80.0	+70.0	-80.0	+70.0	-80.0						
		F	+70.0	-80.0	+70.0	-80.0	+70.0	-80.0	+70.0	-80.0	+70.0	-80.0						
96"	12	A	+70.0	-80.0	+70.0	-80.0	+70.0	-80.0	+70.0	-70.0	+70.0	-70.0						
		D	+70.0	-80.0	+70.0	-80.0	+70.0	-80.0	+70.0	-80.0	+70.0	-80.0						
		E	+70.0	-80.0	+70.0	-80.0	+70.0	-80.0	+70.0	-80.0	+70.0	-80.0						
		F	+70.0	-80.0	+70.0	-80.0	+70.0	-80.0	+70.0	-80.0	+70.0	-80.0						
106-1/4"	12	A	+70.0	-80.0	+70.0	-80.0	-	-	-	-								
		D	+70.0	-80.0	+70.0	-80.0	+70.0	-80.0	+70.0	-80.0								
		E	+70.0	-80.0	+70.0	-80.0	+70.0	-80.0	+70.0	-80.0								
		F	+70.0	-80.0	+70.0	-80.0	+70.0	-80.0	+70.0	-80.0								
108"	12	A	+70.0	-80.0	+70.0	-80.0	-	-	-	-								
		D	+70.0	-80.0	+70.0	-80.0	+70.0	-80.0	+70.0	-80.0								
		E	+70.0	-80.0	+70.0	-80.0	+70.0	-80.0	+70.0	-79.3								
		F	+70.0	-80.0	+70.0	-80.0	+70.0	-80.0	+70.0	-80.0								
111"	12	A	+70.0	-80.0	+70.0	-80.0	-	-	-	-								
		D	+70.0	-80.0	+70.0	-80.0	+70.0	-80.0	+70.0	-80.0								
		E	+70.0	-80.0	+70.0	-80.0	+70.0	-79.3	+70.0	-79.3								
		F	+70.0	-80.0	+70.0	-80.0	+70.0	-80.0	+70.0	-80.0								

Glass Types B & C w/ Reinforcement			Design Load Capacity - PSF (XOX 1/4-1/2-1/4 Sizes) Window Height (in.) / Jamb Anchor Quantity															
Window Width (in.)	Head/Sill Anchor Qty.	Glass Type	24"		26"		36"		38-3/8"		48"		50-5/8"		60"		63"	
			3		3		4		4		5		5		6		6	
72"	9	B	+80.0	-90.0	+80.0	-90.0	+80.0	-90.0	+80.0	-90.0	+80.0	-90.0	+80.0	-90.0	+80.0	-90.0	+80.0	-90.0
		C	+70.0	-80.0	+70.0	-80.0	+70.0	-80.0	+70.0	-80.0	+70.0	-80.0	+70.0	-80.0	+70.0	-80.0	+70.0	-80.0
74"	9	B	+80.0	-90.0	+80.0	-90.0	+80.0	-90.0	+80.0	-90.0	+80.0	-90.0	+80.0	-90.0	+80.0	-90.0	+80.0	-90.0
		C	+70.0	-80.0	+70.0	-80.0	+70.0	-80.0	+70.0	-80.0	+70.0	-80.0	+70.0	-80.0	+70.0	-80.0	+70.0	-80.0
84"	9	B	+80.0	-90.0	+80.0	-90.0	+80.0	-90.0	+80.0	-90.0	+80.0	-90.0						
		C	+70.0	-80.0	+70.0	-80.0	+70.0	-80.0	+70.0	-80.0	+70.0	-80.0						
96"	12	B	+80.0	-90.0	+80.0	-90.0	+80.0	-90.0	+80.0	-90.0	+80.0	-90.0						
		C	+70.0	-80.0	+70.0	-80.0	+70.0	-80.0	+70.0	-80.0	+70.0	-80.0						
106-1/4"	12	B	+80.0	-90.0	+80.0	-90.0	+80.0	-90.0	+80.0	-90.0								
		C	+70.0	-80.0	+70.0	-80.0	+70.0	-80.0	+70.0	-80.0								
108"	12	B	+80.0	-90.0	+80.0	-90.0	+80.0	-90.0	+80.0	-90.0								
		C	+70.0	-80.0	+70.0	-80.0	+70.0	-80.0	+70.0	-80.0								
111"	12	B	+80.0	-90.0	+80.0	-90.0	+80.0	-90.0	+80.0	-90.0								
		C	+70.0	-80.0	+70.0	-80.0	+70.0	-80.0	+70.0	-80.0								

FOR SIZES NOT SHOWN, ROUND UP TO THE NEXT AVAILABLE WIDTH OR HEIGHT DIMENSION SHOWN ON THE TABLE.

NOTE:
GLASS CAPACITIES ON THIS SHEET ARE BASED ON ASTM E1300–09 (3 SEC GUSTS)

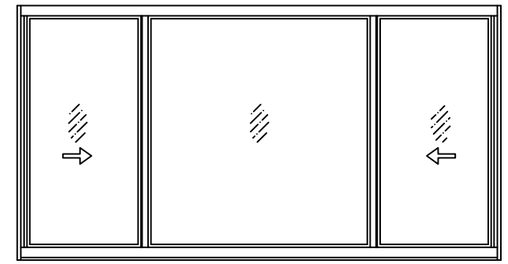

OPERATING VENTS TO BE 1/4 OF THE WINDOW WIDTH

'XOX'

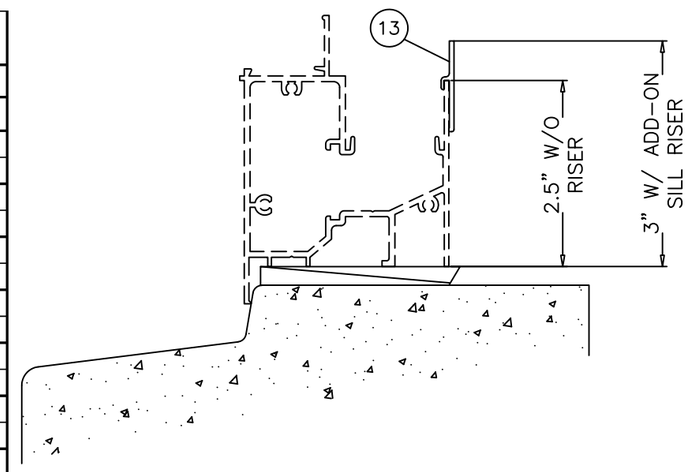

ALL EXTERIOR (+) LOADS SHOWN ON THIS SHEET ARE FROM WINDOWS WITH ADD–ON RISER AT FRAME SILL
FOR STD. SILL (NO RISER) LIMIT EXT.(+) LOADS TO 67.0 PSF
SEE SHEET ABOVE FOR DETAILS.

Revision:
REVISED TABLE FORMAT, ADDED DP TABLE
ROUNDING AND ANCHOR HEAD TYPE NOTES, REMOVED SILICONE AND BACKSTOP ON INSTALL DETAIL

PREPARED BY A. LYNN MILLER
1070 TECHNOLOGY DRIVE
N. VENICE, FL 34275
(941) 480-1600
REGISTRATION #29296

windows systems
ECO WINDOW SYSTEMS, LLC.
8502 N.W. 80th ST. MEDLEY, FL 33166
TEL. (305) 885-5299 FAX. (305) 885-5902

Title	ECO-GUARD SERIES-200 ALUM HORZ. ROLLING WDW (L.M.I.)	Date	7/15/2022	Rev.	B
Desc.	XOX CONFIGURATION DESIGN LOADS CONT.	Drawn By	HONG C.	DWG No.	HR200LM-FPA
Series	SERIES 200	Sheet	6 OF 11		

ANTHONY LYNN MILLER
LICENSE
No. 58705
A. Lynn Miller
10/6/23
STATE OF FLORIDA
PROFESSIONAL ENGINEER
A. LYNN MILLER, P.E.
P.E.# 58705

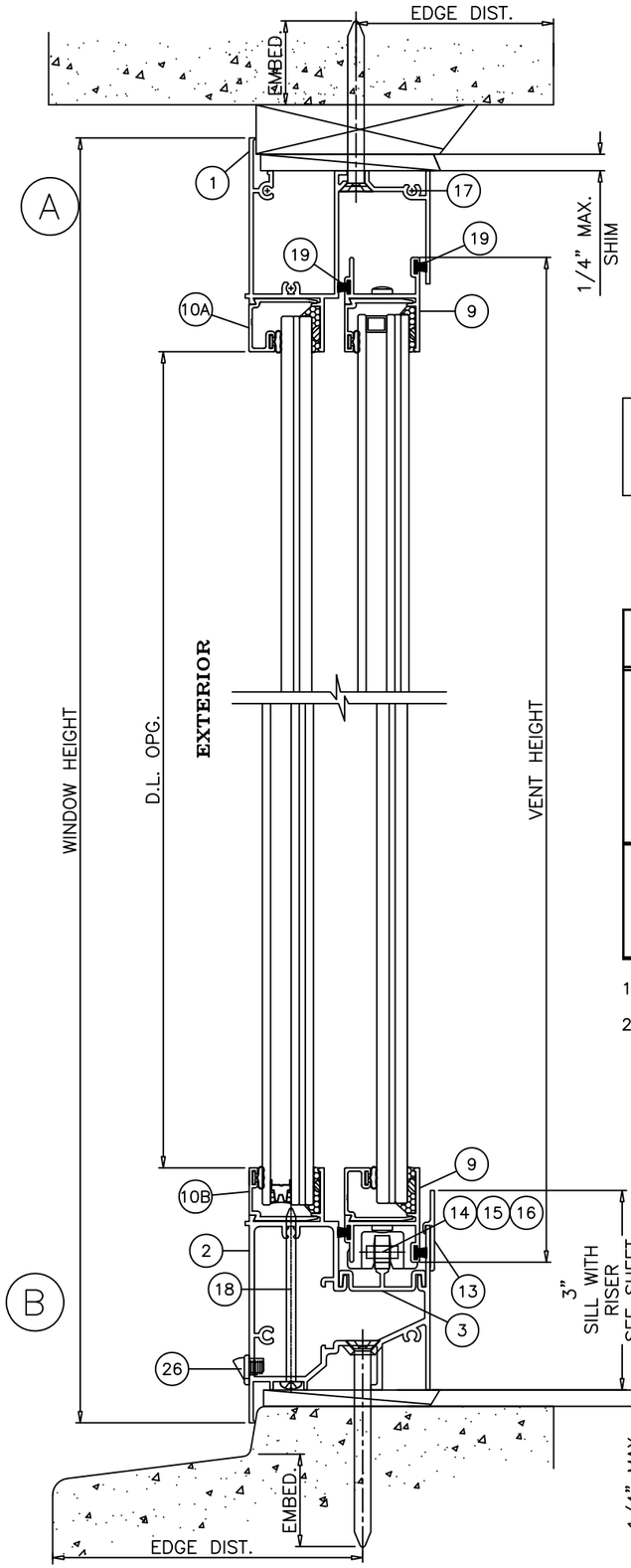

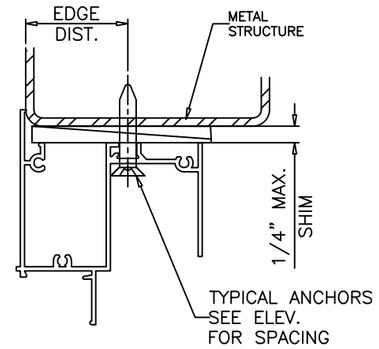

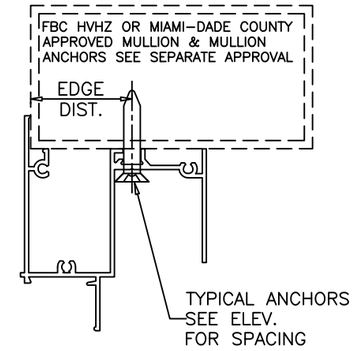

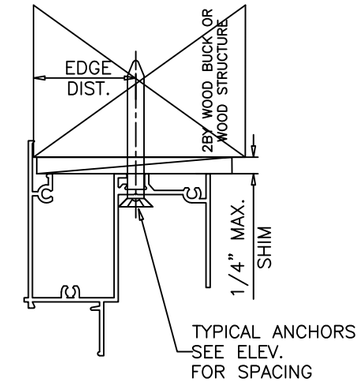

WOOD BUCKS AND METAL STRUCTURE NOT BY 'ECO WDW.' MUST SUSTAIN LOADS IMPOSED BY GLAZING SYSTEM AND TRANSFER THEM TO THE BUILDING STRUCTURE.

TYPICAL ANCHORS: SEE ELEV. FOR SPACING

Anchor Type	Frame Member	Substrate	Min. Edge Distance	Min. Embedment or Metal Thickness
1/4" DeWalt UltraCon +	All	Southern Pine (SG = 0.55)	1"	1-1/2"
	All	Thru 1BY Buck into Concrete (min. 3 ksi)	2-1/2"	1-1/4"
	Jambs	Thru 1BY Buck into Hollow or Filled Block (ASTM C90, min. 2 ksi)	2-1/2"	1-1/4"
	All	Concrete (min. 3ksi)	2-1/2"	1-1/4"
	Jambs	Hollow or Filled Block (ASTM C90, min. 2 ksi)	2-1/2"	1-1/4"
#12 SMS or Self Drilling Screws	All	Southern Pine (SG = 0.55)	1"	1-3/8"
	All	Approved Mullions	3/4"	(3) Threads min. beyond metal thickness
	All	Aluminum 1/8" Thk. Min. (6063-T5)	3/4"	(3) Threads min. beyond metal thickness
	All	Steel 18 Ga. Min. (min. 33 ksi)	3/4"	(3) Threads min. beyond metal thickness

1. STEEL IN CONTACT WITH ALUMINUM TO BE PLATED OR PAINTED
2. ALL ANCHOR HEAD TYPES ARE ACCEPTABLE

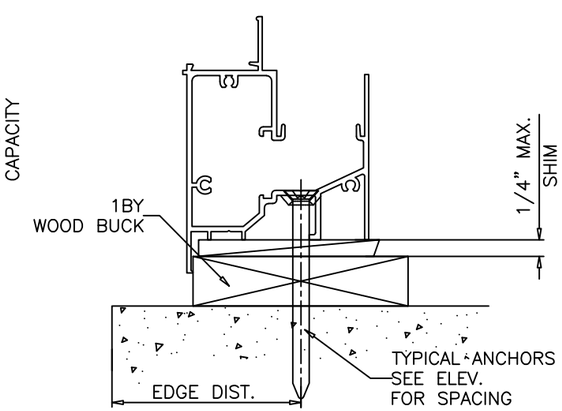

WEEPHOLES:

W1 = 3/8" X 2 1/4" WEEPHOLES AT EACH END AND 37" O.C. MAX

SEALANT:

ALL JOINT AND FRAME CONNECTIONS SEALED WITH JOINT SEALER.

Revision:
REVISED TABLE FORMAT, ADDED DP TABLE ROUNDING AND ANCHOR HEAD TYPE NOTES, REMOVED SILICONE AND BACKSTOP ON INSTALL DETAIL

PREPARED BY A. LYNN MILLER
1070 TECHNOLOGY DRIVE
N. VENICE, FL 34275
(941) 480-1600
REGISTRATION #29296

ECO windows systems
ECO WINDOW SYSTEMS, LLC.
8502 N.W. 80th ST. MEDLEY, FL 33166
TEL. (305) 885-5299 FAX. (305) 885-5902

Title	ECO-GUARD SERIES-200 ALUM HORZ. ROLLING WDW (L.M.I.)	Date	7/15/2022	Rev.	B
Desc.	VERTICAL SECTION DETAILS & ANCHORS	Drawn By	HONG C.	DWG No.	HR200LM-FPA
Series	SERIES 200	Sheet	7 OF 11		

ANTHONY LYNN MILLER
LICENSE
No. 58705
A. Lynn Miller
10/6/23
STATE OF FLORIDA
PROFESSIONAL ENGINEER
A. LYNN MILLER, P.E.
P.E.# 58705

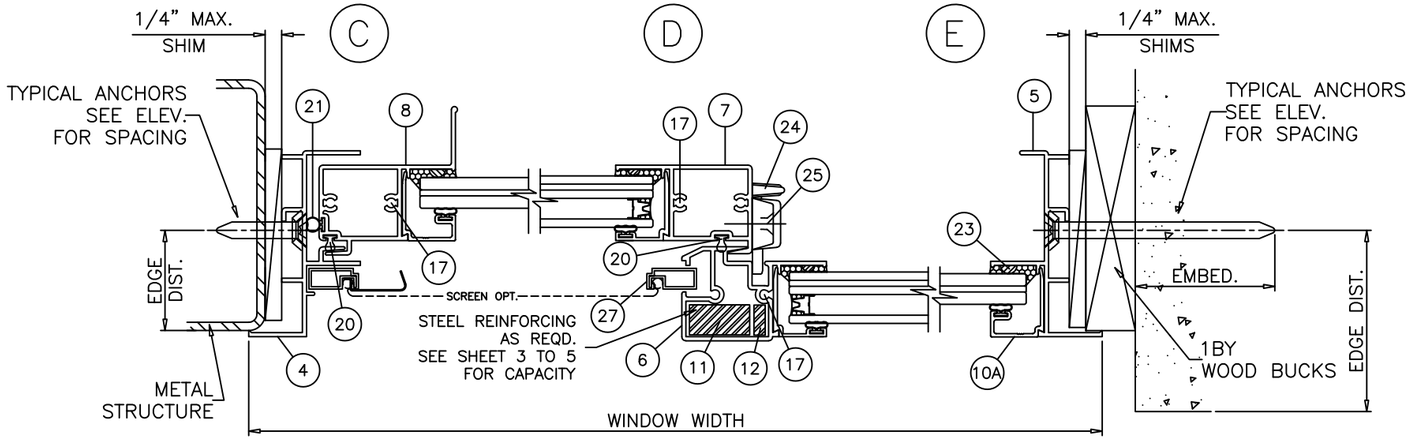

XO LAYOUT

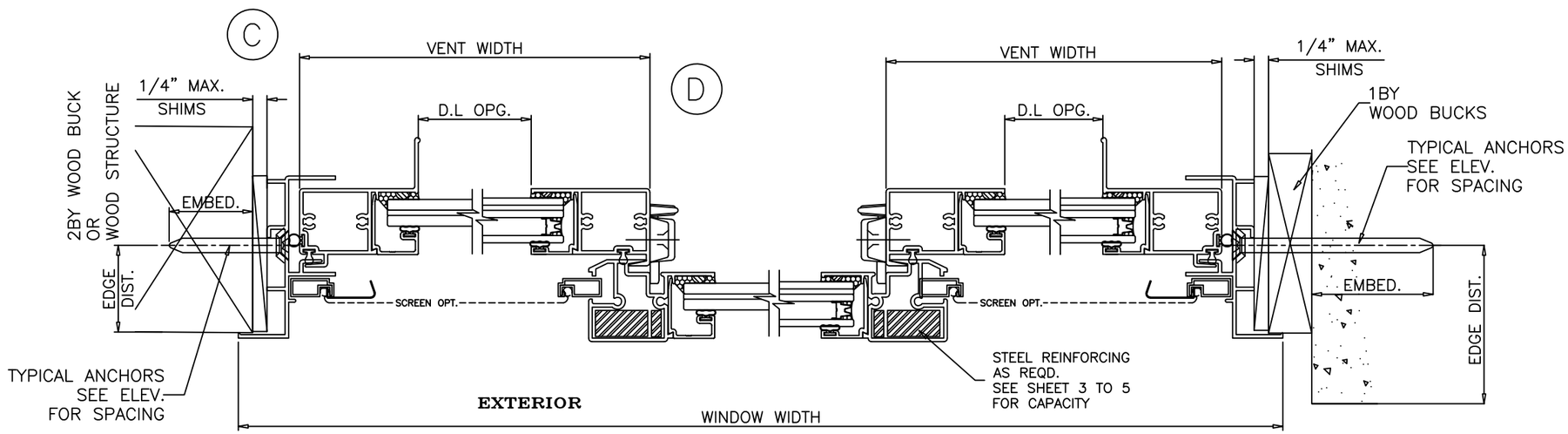

XOX LAYOUT

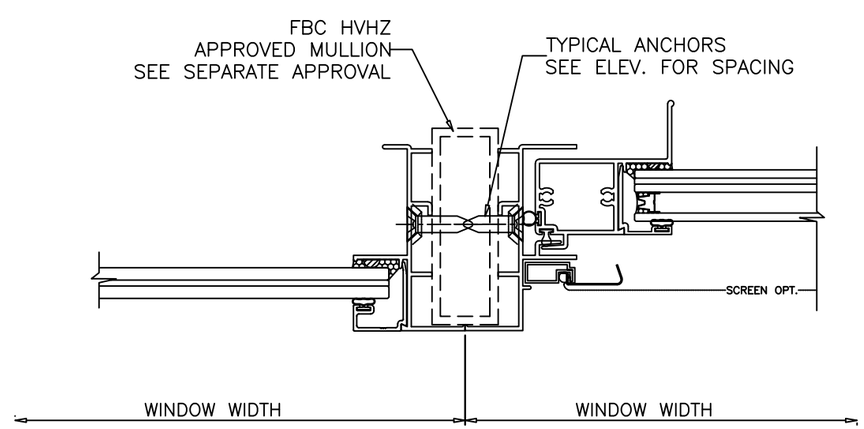

Revision:
REVISED TABLE FORMAT, ADDED DP TABLE ROUNDING AND ANCHOR HEAD TYPE NOTES, REMOVED SILICONE AND BACKSTOP ON INSTALL DETAIL

PREPARED BY A. LYNN MILLER
1070 TECHNOLOGY DRIVE
N. VENICE, FL 34275
(941) 480-1600
REGISTRATION #29296

ECO windows systems
ECO WINDOW SYSTEMS, LLC.
8502 N.W. 80th ST. MEDLEY, FL 33166
TEL. (305) 885-5299 FAX. (305) 885-5902

Title	ECO-GUARD SERIES-200 ALUM HORZ. ROLLING WDW (L.M.I.)	Date	7/15/2022	Rev.	B
Desc.	HORIZONTAL SECTION DETAILS	Drawn By	HONG C.	DWG No.	HR200LM-FPA
Series	SERIES 200	Sheet	8 OF 11		

ANTHONY LYNN MILLER
LICENSE
No. 58705
A. Lynn Miller
10/6/23
STATE OF
FLORIDA
PROFESSIONAL ENGINEER

A. LYNN MILLER, P.E.
P.E.# 58705

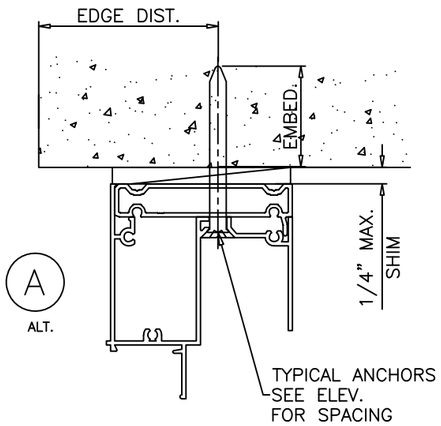

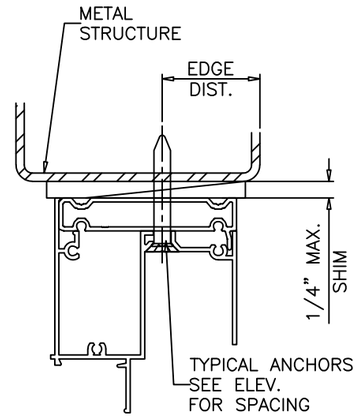

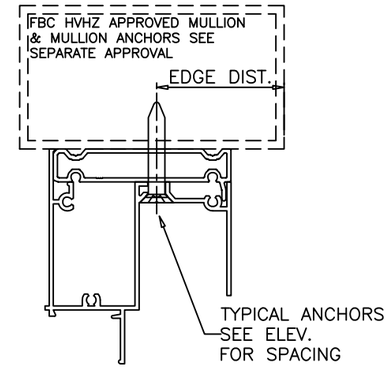

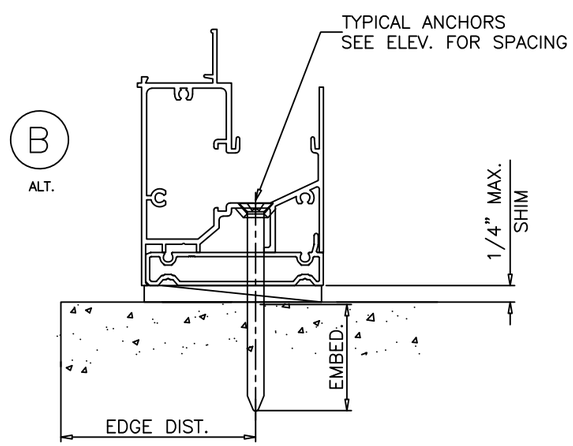

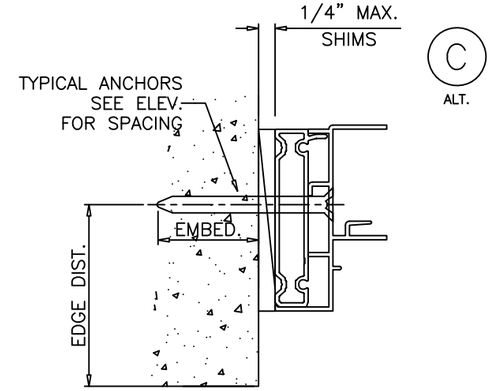

INSTALLATION DETAILS WITH FLUSH FRAME ADAPTER

Revision:	
B	REVISED TABLE FORMAT, ADDED DP TABLE ROUNDING AND ANCHOR HEAD TYPE NOTES, REMOVED SILICONE AND BACKSTOP ON INSTALL DETAIL

PREPARED BY A. LYNN MILLER
1070 TECHNOLOGY DRIVE
N. VENICE, FL 34275
(941) 480-1600
REGISTRATION #29296

ECO windows systems
ECO WINDOW SYSTEMS, LLC.
8502 N.W. 80th ST. MEDLEY, FL 33166
TEL. (305) 885-5299 FAX. (305) 885-5902

Series	Desc.	Sheet	DWG No.	Drawn By	Date	Rev.
SERIES 200	ALTERNATIVE FLUSH FRAME DETAIL	9 OF 11	HR200LM-FPA	HONG C.	7/15/2022	B

Title: ECO-GUARD SERIES-200 ALUM HORZ. ROLLING WDW (L.M.I.)

ANTHONY LYNN MILLER
LICENSE
No. 58705
A. Lynn Miller
10/6/23
STATE OF FLORIDA
PROFESSIONAL ENGINEER

A. LYNN MILLER, P.E.
P.E.# 58705

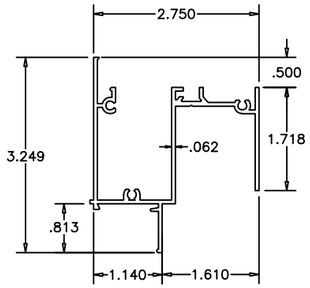

1 FRAME HEAD

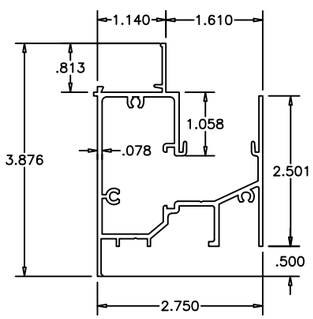

2 FRAME SILL

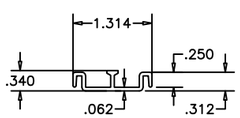

3 SILL TRACK

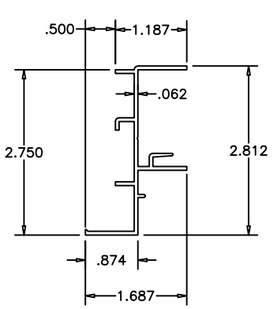

4 MOV. FRAME JAMB

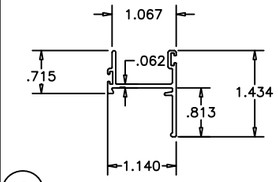

9 VENT TOP/BOT RAIL

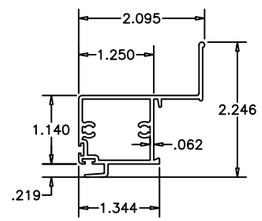

8 JAMB STILE

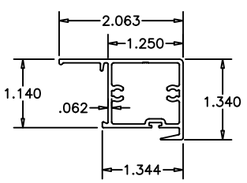

7 METING RAIL

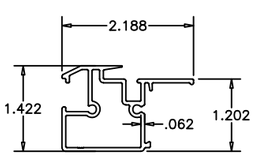

6 FIXED MTG. RAIL

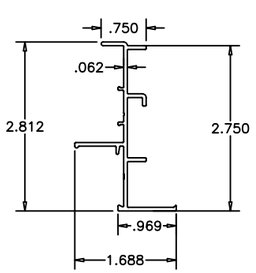

5 FIXED FRAME JAMB

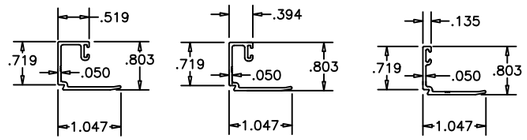

GLAZING BEADS

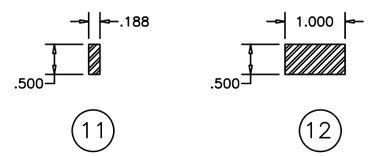

STEEL REINFORCING

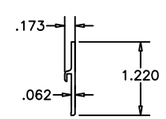

13 ADD-ON SILL RISER

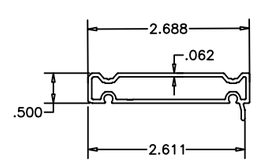

28 FLUSH FRAME ADAPTER

ITEM #	PART #	REQD.	DESCRIPTION	MATERIAL
1	FY201	1	FRAME HEAD	6063–T6
2	FY202	1	FRAME SILL	6063–T6
3	FY203	1	SILL TRACK INSERT	6063–T6
4	FY205	AS REQD.	MOV. FRAME JAMB	6063–T6
5	FY101	AS REQD.	FIXED FRAME JAMB	6063–T6
6	FY104	1/VENT	FIXED MTG. RAIL	6063–T6
7	FY105	1/VENT	VENT INTERLOCK	6063–T6
8	FY206	1/VENT	JAMB STILE	6063–T6
9	FY107	2/VENT	TOP AND BOTTOM RAIL	6063–T6
10	FY108	AS REQD.	GLAZING BEAD (5/16" LAM. GLASS)	6063–T6
10A	FY109	AS REQD.	GLAZING BEAD (7/16" LAM. GLASS)	6063–T6
10B	FY110	AS REQD.	GLAZING BEAD (INSUL. LAM. GLASS)	6063–T6
11		AS REQD.	1/2" X 3/16" STEEL REINFORCEMENT	STEEL
12		AS REQD.	1/2" X 1" STEEL REINFORCEMENT	STEEL
13	FY204	AS REQD.	ADD–ON SILL RISER	6063–T6
14	FY208	4/VENT	ROLLER HOUSING & GUIDE	CELCON
15	FY209	2/VENT	ROLLER	BRASS
16	FY210	2/VENT	ROLLER PIN	ST. STEEL
17	#8 X 1"	AS REQD.	FRAME/VENT ASSEMBLY SCREWS	CRS
18	#8 X 3"	2/VENT	FIX. RAIL SILL SCREWS (SILL END)	CRS
19	W23181	AS REQD.	FIN SEAL W'STRIPPING	–
20	Q300T190	AS REQD.	BULB SEAL	Q–LON
21	E207	AS REQD.	BULB SEAL	SANTOPRENE
22	E203	AS REQD.	GLAZING BEAD BULB	SANTOPRENE
23	FLB–50	AS REQD.	GLASS OFFSET SPACER	SILICONE
24	SL203P	2/VENT	SWEEP LATCH	–
25	#8 X 5/8"	2/LATCH	LATCH INST. SCREW	ST. STEEL
26	WA2L	AS REQD.	WEEP VALVE	–
27	–	1/VENT	5/16" BOX SCREEN	–
28	FY120	AS REQD.	FLUSH FRAME ADAPTER	6063–T6
29	–	AS REQD.	SETTING BLOCK	EPDM
30	–	AS REQD.	IG SPACER: CARDINAL XL & SUPERSPACER	VARIOUS

Revision:
REVISED TABLE FORMAT, ADDED DP TABLE ROUNDING AND ANCHOR HEAD TYPE NOTES, REMOVED SILICONE AND BACKSTOP ON INSTALL DETAIL

PREPARED BY A. LYNN MILLER
1070 TECHNOLOGY DRIVE
N. VENICE, FL 34275
(941) 480-1600
REGISTRATION #29296

ECO windows systems
ECO WINDOW SYSTEMS, LLC.
8502 N.W. 80th ST. MEDLEY, FL 33166
TEL. (305) 885-5299 FAX. (305) 885-5902

Series	Desc.	Sheet	DWG No.	Rev.
SERIES 200	PROFILES & BOM	10 OF 11	HR200LM-FPA	B

Title: ECO-GUARD SERIES-200 ALUM HORZ. ROLLING WDW (L.M.I.)

Drawn By: HONG C.

Date: 7/15/2022

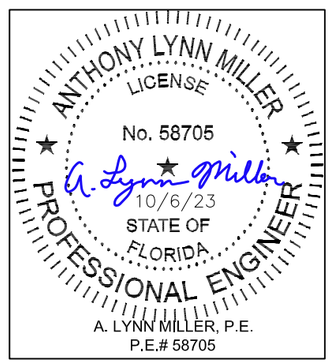

A. LYNN MILLER, P.E.
P.E.# 58705

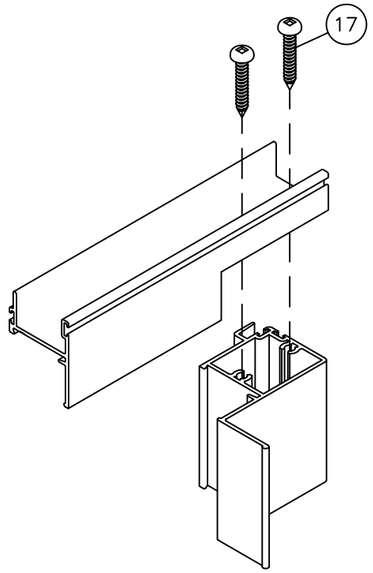

VENT TOP/BOTTOM CORNERS

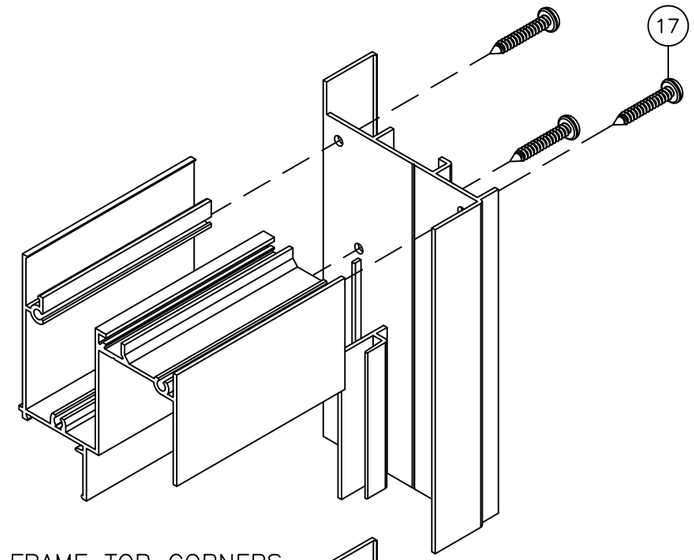

FRAME TOP CORNERS

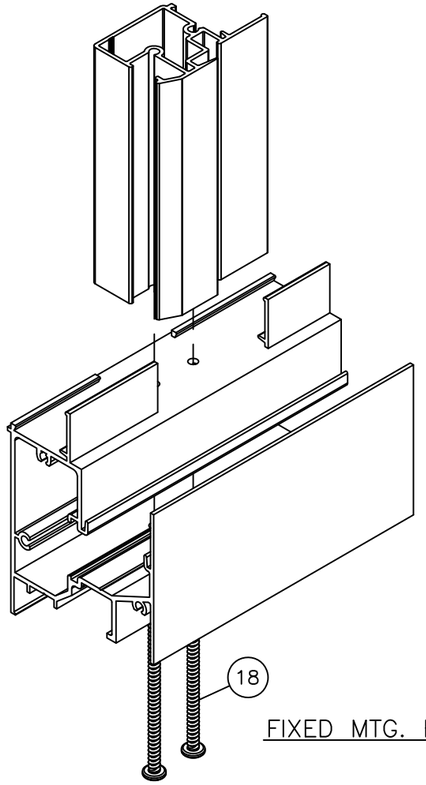

FIXED MTG. RAIL CORNER

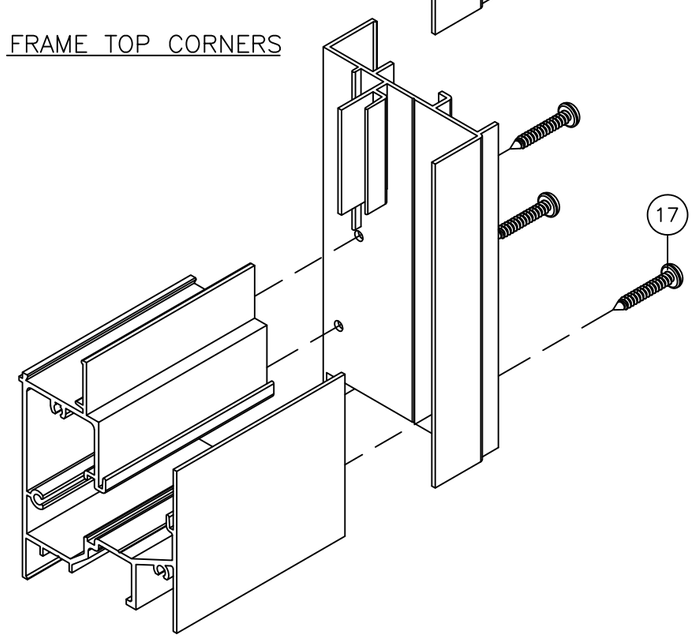

FRAME BOTTOM CORNERS

Revision:
REVISED TABLE FORMAT, ADDED DP TABLE ROUNDING AND ANCHOR HEAD TYPE NOTES, REMOVED SILICONE AND BACKSTOP ON INSTALL DETAIL

PREPARED BY A. LYNN MILLER
1070 TECHNOLOGY DRIVE
N. VENICE, FL 34275
(941) 480-1600
REGISTRATION #29296

ECO windows systems
ECO WINDOW SYSTEMS, LLC.
8502 N.W. 80th ST. MEDLEY, FL 33166
TEL. (305) 885-5299 FAX. (305) 885-5902

Title	ECO-GUARD SERIES-200 ALUM HORZ. ROLLING WDW (L.M.I.)	Date	7/15/2022
Desc.	CORNER JOINT ASSEMBLY DETAILS	Drawn By	HONG C.
Series	SERIES 200	Sheet	11 OF 11
		DWG No.	HR200LM-FPA
		Rev.	B

ANTHONY LYNN MILLER
LICENSE
No. 58705
A. Lynn Miller
10/6/23
STATE OF FLORIDA
PROFESSIONAL ENGINEER

A. LYNN MILLER, P.E.
P.E.# 58705