Product Approval
USER: Public User

FL #	FL40096-R5
Application Type	Revision
Code Version	2023
Application Status	Approved
Comments	
Archived	☐
Product Manufacturer	Eco Window Systems
Address/Phone/Email	8502 NW 80th Street Suite 103 Medley, FL 33166 (305) 885-5299 carlos.martinez@ecowindowsystems.com
Authorized Signature	Carlos Martinez carlos.martinez@ecowindowsystems.com
Technical Representative	Carlos Martinez
Address/Phone/Email	8502 NW 80th Street #103 Medley, FL 33166 (786) 307-2474 carlos.martinez@ecowindowsystems.com
Quality Assurance Representative	
Address/Phone/Email	
Category	Windows
Subcategory	Single Hung
Compliance Method	Evaluation Report from a Florida Registered Architect or a Licensed Florida Professional Engineer ☐ Evaluation Report - Hardcopy Received
Florida Engineer or Architect Name who developed the Evaluation Report	Javad Ahmad
Florida License	PE-70592
Quality Assurance Entity	Keystone Certifications, Inc.
Quality Assurance Contract Expiration Date	12/16/2034
Validated By	Ammad Riaz, P.E. ☑ Validation Checklist - Hardcopy Received
Certificate of Independence	FL40096_R5_COI_Certificate_of_Independence_JA-PE1.pdf

Referenced Standard and Year (of Standard)

Standard	Year
TAS 201	1994
TAS 202	1994
TAS 203	1994

Equivalence of Product Standards
Certified By

Sections from the Code

Product Approval Method	Method 1 Option D
Date Submitted	04/10/2025
Date Validated	04/23/2025
Date Pending FBC Approval	05/01/2025
Date Approved	06/10/2025

Summary of Products

FL #	Model, Number or Name	Description
40096.1	Eco-Guard Series 100 Single Hung	Small Missile Impact Resistant, Aluminum Single Hung Window
Limits of Use **Approved for use in HVHZ:** Yes **Approved for use outside HVHZ:** Yes **Impact Resistant:** Yes **Design Pressure:** N/A **Other:** Please see the enclosed documents for product performance information, anchorage details, and anchor type, size, and spacing information.		**Installation Instructions** FL40096_R5_II_ECO-GUARD_100_SINGLE_HUNG_WINDOW-SMI-JA-1844-24-SS1.pdf Verified By: Javad Ahmad PE-70592 Created by Independent Third Party: Yes **Evaluation Reports** FL40096_R5_AE_ECO_100-Single_Hung_Window-SMI-PA_EVR.pdf Created by Independent Third Party: Yes
40096.2	Eco-Guard Series 100 Single Hung	Large Missile Impact Resistant, Aluminum Single Hung Window
Limits of Use **Approved for use in HVHZ:** Yes **Approved for use outside HVHZ:** Yes **Impact Resistant:** Yes **Design Pressure:** N/A **Other:** Please see the enclosed documents for product performance information, anchorage details, and anchor type, size, and spacing information.		**Installation Instructions** FL40096_R5_II_ECO-GUARD_100_SINGLE_HUNG_WINDOW-LMI-JA-1844-24-SS1.pdf Verified By: Javad Ahmad PE-70592 Created by Independent Third Party: Yes **Evaluation Reports** FL40096_R5_AE_ECO_100-Single_Hung_Window-LMI-PA_EVR.pdf Created by Independent Third Party: Yes
40096.3	Eco-Guard Series 50 Single Hung	Large Missile Impact Resistant, Aluminum Single Hung Window
Limits of Use **Approved for use in HVHZ:** Yes **Approved for use outside HVHZ:** Yes **Impact Resistant:** Yes **Design Pressure:** N/A **Other:** Please see the enclosed documents for product performance information, anchorage details, and anchor type, size, and spacing information.		**Installation Instructions** FL40096_R5_II_ECO-GUARD_50_SINGLE_HUNG_WINDOW-LMI-JA-1844-24-SS1.pdf Verified By: Javad Ahmad PE-70592 Created by Independent Third Party: Yes **Evaluation Reports** FL40096_R5_AE_ECO_50-Single_Hung_Window-LMI-PA_EVR.pdf Created by Independent Third Party: Yes
40096.4	Eco-Guard Series 50 Single Hung	Non-Impact Resistant, Aluminum Single Hung Window
Limits of Use **Approved for use in HVHZ:** Yes **Approved for use outside HVHZ:** Yes **Impact Resistant:** No **Design Pressure:** N/A **Other:** Please see the enclosed documents for product performance information, anchorage details, and anchor type, size, and spacing information.		**Installation Instructions** FL40096_R5_II_ECO-GUARD_50_SINGLE_HUNG_WINDOW-NI-JA-1844-24-SS1.pdf Verified By: Javad Ahmad PE-70592 Created by Independent Third Party: Yes **Evaluation Reports** FL40096_R5_AE_ECO_50-Single_Hung_Window-NI-PA_EVR.pdf Created by Independent Third Party: Yes
40096.5	Series 150 Eco-Guard Single Hung	Large Missile Impact Resistant, Aluminum Single Hung Window
Limits of Use **Approved for use in HVHZ:** Yes **Approved for use outside HVHZ:** Yes **Impact Resistant:** Yes **Design Pressure:** N/A **Other:** Please see the enclosed documents for product		**Installation Instructions** FL40096_R5_II_ECO-GUARD_150_SINGLE_HUNG_WINDOW-LMI-JA-1206-25-SS2.pdf Verified By: Javad Ahmad PE-70592 Created by Independent Third Party: Yes **Evaluation Reports**

performance information, anchorage details, and anchor type, size, and spacing information.		FL40096_R5_AE_ECO_150-Single_Hung_Window-LMI-PA_EVR.pdf Created by Independent Third Party: Yes
40096.6	Series 150 Eco-Guard Single Hung	Small Missile Impact Resistant, Aluminum Single Hung Window
Limits of Use **Approved for use in HVHZ:** Yes **Approved for use outside HVHZ:** Yes **Impact Resistant:** Yes **Design Pressure:** N/A **Other:** Please see the enclosed documents for product performance information, anchorage details, and anchor type, size, and spacing information.		**Installation Instructions** FL40096_R5_II_ECO-GUARD_150_SINGLE_HUNG_WINDOW-SMI-JA-1206-25-SS2.pdf Verified By: Javad Ahmad PE-70592 Created by Independent Third Party: Yes **Evaluation Reports** FL40096_R5_AE_ECO_150-Single_Hung_Window-SMI-PA_EVR.pdf Created by Independent Third Party: Yes
40096.7	Series 155 Eco-Guard Single Hung	Large Missile Impact Resistant, Aluminum Single Hung Window
Limits of Use **Approved for use in HVHZ:** Yes **Approved for use outside HVHZ:** Yes **Impact Resistant:** Yes **Design Pressure:** N/A **Other:** Please see the enclosed documents for product performance information, anchorage details, and anchor type, size, and spacing information.		**Installation Instructions** FL40096_R5_II_ECO-GUARD_155_SINGLE_HUNG_WINDOW-LMI-JA-1844-24-SS1.pdf Verified By: Javad Ahmad PE-70592 Created by Independent Third Party: Yes **Evaluation Reports** FL40096_R5_AE_ECO_155-Single_Hung_Window-LMI-PA_EVR.pdf Created by Independent Third Party: Yes
40096.8	Series 155 Eco-Guard Single Hung	Small Missile Impact Resistant, Aluminum Single Hung Window
Limits of Use **Approved for use in HVHZ:** Yes **Approved for use outside HVHZ:** Yes **Impact Resistant:** Yes **Design Pressure:** N/A **Other:** Please see the enclosed documents for product performance information, anchorage details, and anchor type, size, and spacing information.		**Installation Instructions** FL40096_R5_II_ECO-GUARD_155_SINGLE_HUNG_WINDOW-SMI-JA-1844-24-SS1.pdf Verified By: Javad Ahmad PE-70592 Created by Independent Third Party: Yes **Evaluation Reports** FL40096_R5_AE_ECO_155-Single_Hung_Window-SMI-PA_EVR.pdf Created by Independent Third Party: Yes

Under Florida law, email addresses are public records. If you do not want your e-mail address released in response to a public-records request, do not send electronic mail to this entity. Instead, contact the office by phone or by traditional mail. If you have any questions, please contact 850.487.1395. *Pursuant to Section 455.275(1), Florida Statutes, effective October 1, 2012, licensees licensed under Chapter 455, F.S. must provide the Department with an email address if they have one. The emails provided may be used for official communication with the licensee. However email addresses are public record. If you do not wish to supply a personal address, please provide the Department with an email address which can be made available to the public. To determine if you are a licensee under Chapter 455, F.S., please click here .

Product Approval Accepts:

Credit Card Safe securityMETRICS

Design Load Capacity - PSF									
Window Width (in.)	Anchor Type	Window Height (in.)							
		26" (4)		38-3/8" (4)		50-5/8" (6)		63" (6)	
19-1/8"	1/4" ITW Tapcon	+75.0	-141.1	+75.0	-141.1	+75.0	-141.1	+75.0	-141.1
	1/4" DeWalt UltraCon+	+75.0	-141.1	+75.0	-141.1	+75.0	-141.1	+75.0	-141.1
	#14 SMS	+75.0	-141.1	+75.0	-141.1	+75.0	-141.1	+75.0	-141.1
26-1/2"	1/4" ITW Tapcon	+75.0	-141.1	+75.0	-141.1	+75.0	-141.1	+75.0	-141.1
	1/4" DeWalt UltraCon+	+75.0	-141.1	+75.0	-141.1	+75.0	-141.1	+75.0	-141.1
	#14 SMS	+75.0	-141.1	+75.0	-141.1	+75.0	-141.1	+75.0	-141.1
30"	1/4" ITW Tapcon	+75.0	-141.1	+75.0	-141.1	+75.0	-141.1	+75.0	-141.1
	1/4" DeWalt UltraCon+	+75.0	-141.1	+75.0	-141.1	+75.0	-141.1	+75.0	-141.1
	#14 SMS	+75.0	-141.1	+75.0	-141.1	+75.0	-141.1	+75.0	-141.1
37"	1/4" ITW Tapcon	+75.0	-141.1	+75.0	-138.7	+75.0	-141.1	+75.0	-126.8
	1/4" DeWalt UltraCon+	+75.0	-141.1	+75.0	-141.1	+75.0	-141.1	+75.0	-139.4
	#14 SMS	+75.0	-141.1	+75.0	-141.1	+75.0	-141.1	+75.0	-141.1

NOTE:
GLASS CAPACITIES ON THIS SHEET ARE BASED ON ASTM E1300–16 (3 SEC. GUSTS)

* NO. IN PARENTHESIS INDICATE NO. OF ANCHORS PER JAMB.
* FOR SIZES NOT SHOWN, ROUND UP TO THE NEXT AVAILABLE WIDTH OR HEIGHT DIMENSION SHOWN ON THE TABLE.

ECO–GUARD SERIES–100
ALUMINUM SINGLE HUNG WINDOW

DESIGN LOAD RATINGS FOR THESE WINDOWS TO BE AS PER CHARTS SHOWN ABOVE.

APPROVAL APPLIES TO SINGLE UNITS OR SIDE BY SIDE COMBINATIONS OF S.H./S.H. OR SINGLE HUNG WITH OTHER WINDOW TYPES IN MODULES OF TWO OR MORE WINDOWS USING HVHZ FPA OR MIAMI DADE APPROVED MULLIONS IN BETWEEN. LOWER DESIGN PRESSURE FROM WINDOWS OR MULLION APPROVAL WILL APPLY TO ENTIRE SYSTEM.

THIS PRODUCT HAS BEEN DESIGNED AND TESTED TO COMPLY WITH THE REQUIREMENTS OF THE FLORIDA BUILDING CODE INCLUDING HIGH VELOCITY HURRICANE ZONE (HVHZ).

1BY OR 2BY WOOD BUCKS & BUCK FASTENERS BY OTHERS, MUST BE DESIGNED AND INSTALLED ADEQUATELY TO TRANSFER APPLIED PRODUCT LOADS TO THE BUILDING STRUCTURE

ANCHORS SHALL BE CORROSION RESISTANT, SPACED AS SHOWN ON DETAILS AND INSTALLED PER MANUF'S INSTRUCTIONS. SPECIFIED EMBEDMENT TO BASE MATERIAL SHALL BE BEYOND WALL DRESSING OR STUCCO.

A LOAD DURATION INCREASE IS USED IN DESIGN OF ANCHORS INTO WOOD ONLY.

ALL SHIMS TO BE HIGH IMPACT, NON–METALLIC AND NON–COMPRESSIBLE.

MATERIALS INCLUDING BUT NOT LIMITED TO STEEL/METAL SCREWS, THAT COME INTO CONTACT WITH OTHER DISSIMILAR MATERIALS SHALL MEET THE REQUIREMENTS OF THE FLORIDA BLDG. CODE & ADOPTED STANDARDS.

THIS PRODUCT APPROVAL IS GENERIC AND DOES NOT PROVIDE INFORMATION FOR A SITE SPECIFIC PROJECT, i.e. LIFE SAFETY OF THIS PRODUCT, ADEQUACY OF STRUCTURE RECEIVING THIS PRODUCT AND SEALING AROUND OPENING FOR WATER INFILTRATION RESISTANCE ETC.
CONDITIONS NOT SHOWN IN THIS DRAWING ARE TO BE ANALYZED SEPARATELY, AND TO BE REVIEWED BY BUILDING OFFICIAL

DESIGN LOAD SHOWN ARE BASED ON 'ALLOWABLE STRESS DESIGN (ASD)'.

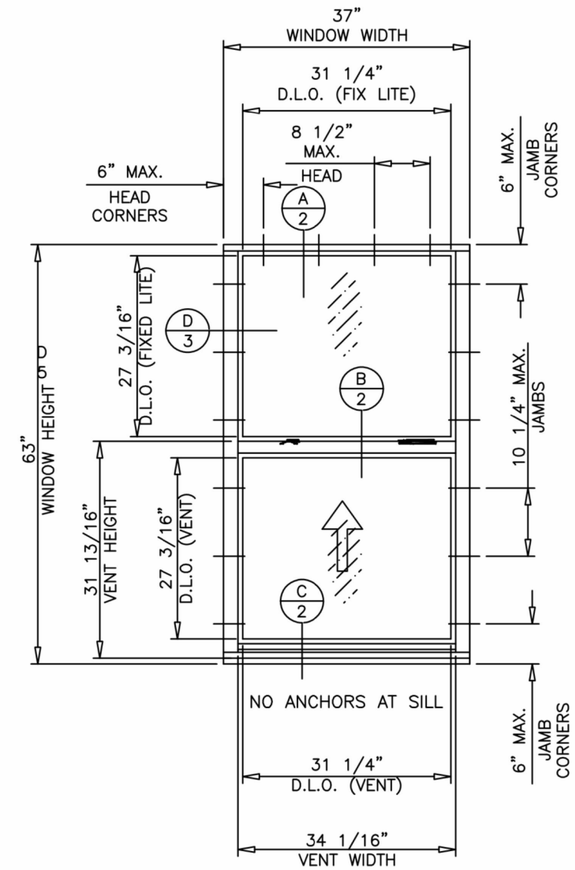

TYPICAL ELEVATIONS

TESTED UNIT

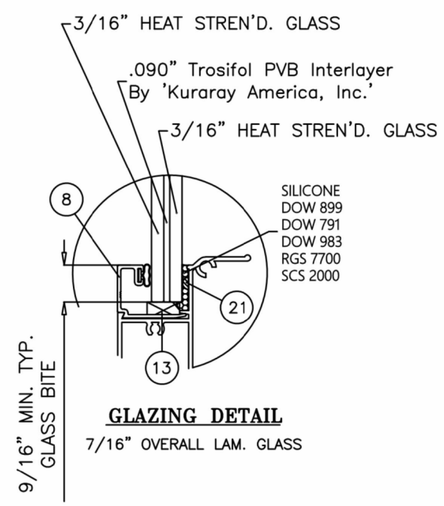

GLAZING DETAIL

7/16" OVERALL LAM. GLASS

THESE WINDOWS ARE RATED FOR SMALL MISSILE IMPACT. HVHZ FPA IMPACT RESISTANT SHUTTERS REQUIRED FOR INSTALLATIONS UP TO 30 FT. OF GRADE. SHUTTERS NOT REQD. FOR INSTALLATIONS ABOVE 30 FT. OF GRADE.

FL#40096.1

JAVAD AHMAD PE, inc
7875 NW 12th St., Suite 102 Doral, FL 33126
Ph: (305) 424-8001
support@ja-pe.com
CONSULTING • STRUCTURAL DESIGN • FACADES • BUILDING ENVELOPE • SYSTEM DESIGN • PRODUCT APPROVALS

drawing no. JA-1844-24 | drawn by: MA
date: 12/31/2024 | check by: BS

REVISION

No.	DATE	BY	DESCRIPTION

SERIES 100: ECO-GUARD ALUMINUM SINGLE HUNG WINDOW (S.M.I) SMALL MISSILE IMPACT RATED

ECO window systems
ECO WINDOW SYSTEMS, LLC.
8502 N.W. 80th ST. MEDLEY, FL 33166
TEL. (305) 885-5299 FAX. (305) 885-5902

JAVAD AHMAD LICENSE No 70592 STATE OF FLORIDA PROFESSIONAL ENGINEER

SEALED:12/31/2024

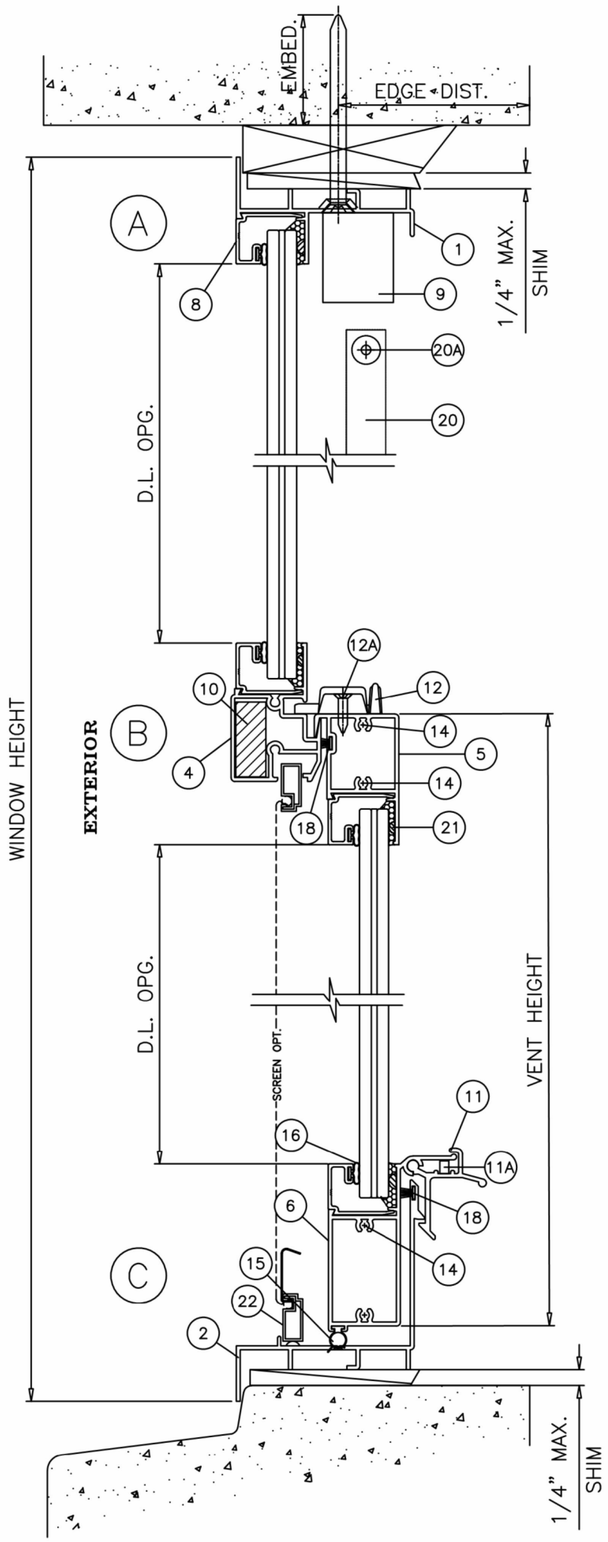

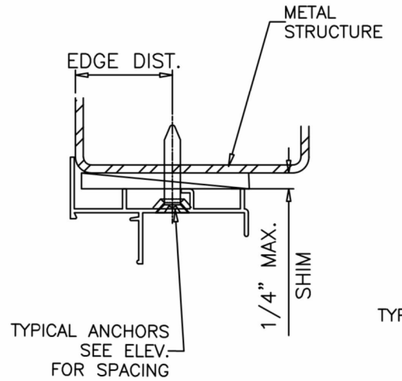

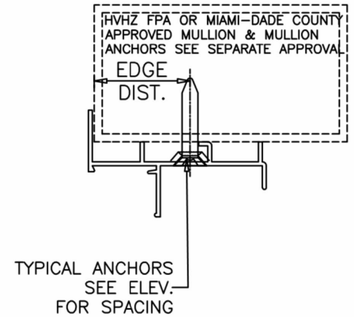

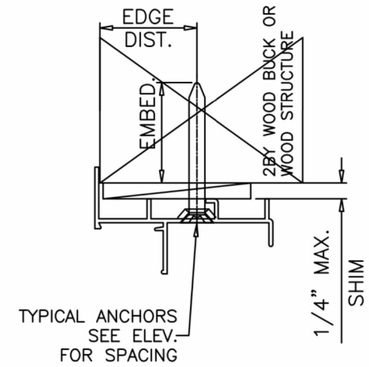

WOOD BUCKS AND METAL STRUCTURE NOT BY 'ECO WDW.' MUST SUSTAIN LOADS IMPOSED BY GLAZING SYSTEM AND TRANSFER THEM TO THE BUILDING STRUCTURE.

TYPICAL ANCHORS: SEE ELEV. FOR SPACING

Anchor Type	Frame Member	Substrate	Min. Edge Distance	Min. Embedment or Metal Thickness
1/4" ITW Tapcon or DeWalt UltraCon +	Head/Jambs	Southern Pine (SG = 0.55)	1"	1-1/2"
	Head/Jambs	Thru 1BY Buck into Concrete (min. 3 ksi)	2-1/2"	1-1/4"
	Jambs	Thru 1BY Buck into Hollow or Filled Block (ASTM C90, min. 2 ksi)	2-1/2"	1-1/4"
	Head/Jambs	Concrete (min. 3ksi)	2-1/2"	1-1/2"
	Jambs	Hollow or Filled Block (ASTM C90, min. 2 ksi)	2-1/2"	1-1/4"
#14 SMS or Self Drilling Screws (Gr. 2)	All	Approved Mullions	3/4"	(3) Threads min. beyond metal thickness
	Head/Jambs	Aluminum 1/8" Thk. Min. (6063-T5)	3/4"	(3) Threads min. beyond metal thickness
	Head/Jambs	Steel 1/8" Thk. Min. (min. 36 ksi)	3/4"	(3) Threads min. beyond metal thickness

1. STEEL IN CONTACT WITH ALUMINUM TO BE PLATED OR PAINTED
2. ALL ANCHOR HEAD TYPES ARE ACCEPTABLE

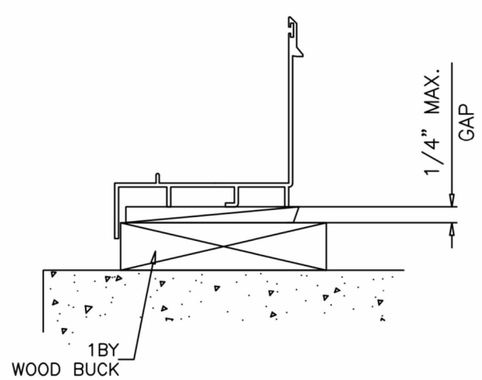

SEALANT:

ALL JOINT AND FRAME CONNECTIONS SEALED WITH JOINT SEALER.

FL#40096.1

JAVAD AHMAD PE, inc
7875 NW 12th St., Suite 102 Doral, FL 33126
Ph: (305) 424-8001
support@ja-pe.com
CONSULTING • STRUCTURAL DESIGN • FACADES • BUILDING ENVELOPE • SYSTEM DESIGN • PRODUCT APPROVALS

drawing no. JA-1844-24 drawn by: MA
date: 12/31/2024 check by: BS

REVISION

No.	DATE	BY	DESCRIPTION

SERIES 100: ECO-GUARD ALUMINUM SINGLE HUNG WINDOW (S.M.I) SMALL MISSILE IMPACT RATED

ECO window systems
ECO WINDOW SYSTEMS, LLC.
8502 N.W. 80th ST. MEDLEY, FL 33166
TEL. (305) 885-5299 FAX. (305) 885-5902

JAVAD AHMAD LICENSE No 70592 STATE OF FLORIDA PROFESSIONAL ENGINEER
SEALED:12/31/2024

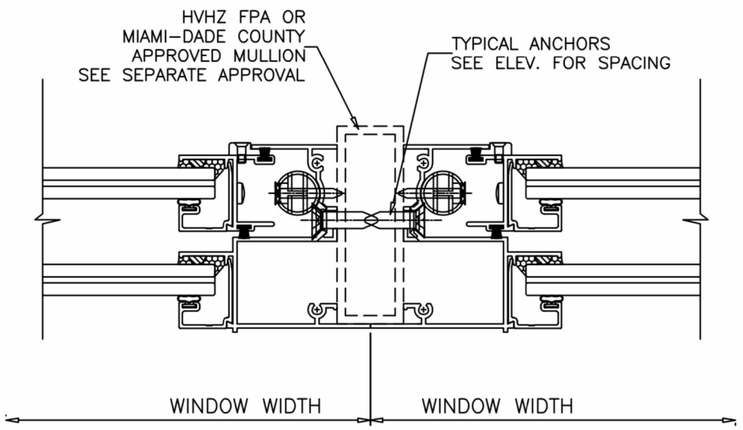

ITEM #	PART #	REQD.	DESCRIPTION	MATERIAL	MANF./SUPPLIER/REMARKS
1	FY101	1	FRAME HEAD	6063 – T6	–
2	FY115	1	FRAME SILL	6063 – T6	–
3	FY103	2	FRAME JAMB	6063 – T6	–
4	FY104	1	FIXED MTG. RAIL	6063 – T6	–
5	FY105	1	VENT TOP RAIL	6063 – T6	–
6	FY114	1	VENT BOTTOM RAIL	6063 – T6	–
7	FY107	2	VENT SIDE RAIL	6063 – T6	–
8	FY109	AS REQD.	GLAZING BEAD (7/16" LAM. GLASS)	6063 – T6	–
9	FY116	2 / VENT	SASH STOP	6063 – T6	–
10	–	1	FIX. MTG. RAIL REINFORCEMENT	6063 – T6	–
12	SL203P	1/ VENT	SWEEP LATCH, CENTERED AT VENT	ZAWAK	SULLIVAN & ASSOC.
12A	#8 X 5/8"	2 / LATCH	LATCH INST. SCREWS	ST. STEEL	FH SMS
13	–	AS REQD.	SETTING BLOCK	EPDM	DUROMETER 80±5 SHORE A
14	#8 X 1"	AS REQD.	FRAME & VENT ASSEMBLY SCREWS	CRS	PH SMS
15	E207	AS REQD.	BOTTOM RAIL SEAL – SERIES 101	NEOPRENE	ULTRAFAB
16	E203	AS REQD.	GLAZING BEAD BULB	SANTOPRENE	ULTRAFAB
18	W23181	AS REQD.	FIN SEAL W'STRIPPING	–	ULTRAFAB
19	FY117	4 / VENT	SASH GUIDE	CELCON	M&M PLASTICS
19A	#6 X 3/8"	1 / GUIDE	SASH GUIDE INST. SCREW	–	OH SMS TYPE B
20	F210	2 / VENT	SASH BALANCE	–	SUPERBOOST BY BSI
20A	#8 X 5/8"	1 / BALANCE	BALANCE INST. SCREW	–	PFH SMS
21	–	AS REQD.	GLASS OFFSET SPACER	SILICONE	FRANK LOWE
22	–	1	5/16" BOX SCREEN	–	OPTIONAL
23	FY120	AS REQD.	FLUSH FRAME ADAPTER	6063 – T6	OPTIONAL

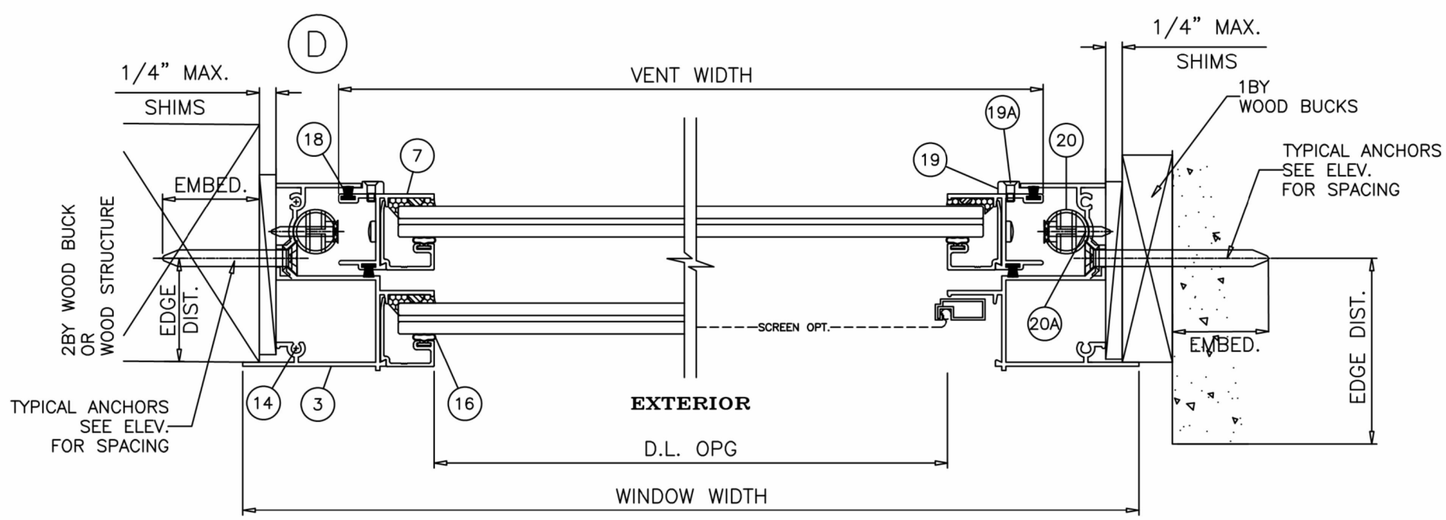

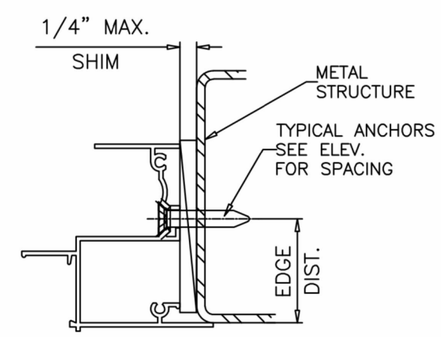

FL#40096.1

JAVAD AHMAD PE, inc
7875 NW 12th St., Suite 102 Doral,
FL 33126
Ph: (305) 424-8001
support@ja-pe.com
CONSULTING • STRUCTURAL DESIGN • FACADES • BUILDING ENVELOPE • SYSTEM DESIGN • PRODUCT APPROVALS

drawing no. JA-1844-24 drawn by: MA
date: 12/31/2024 check by: BS

REVISION

No.	DATE	BY	DESCRIPTION

SERIES 100: ECO-GUARD ALUMINUM SINGLE HUNG WINDOW (S.M.I)
SMALL MISSILE IMPACT RATED

ECO window systems
ECO WINDOW SYSTEMS, LLC.
8502 N.W. 80th ST. MEDLEY, FL 33166
TEL. (305) 885-5299 FAX. (305) 885-5902

JAVAD AHMAD LICENSE No 70592 STATE OF FLORIDA PROFESSIONAL ENGINEER
SEALED:12/31/2024

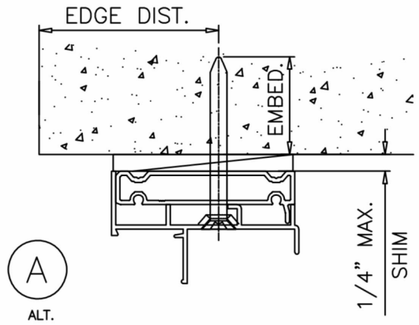

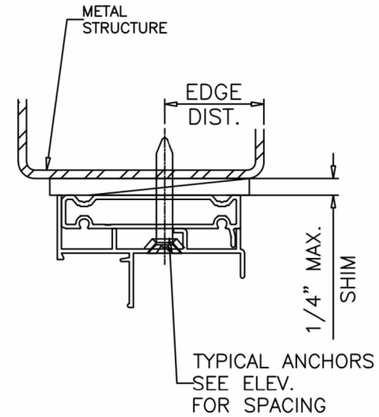

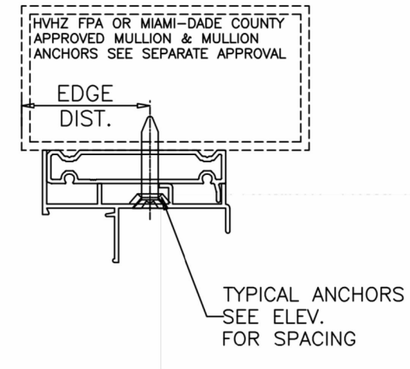

INSTALLATION DETAILS WITH FLUSH FRAME ADAPTER

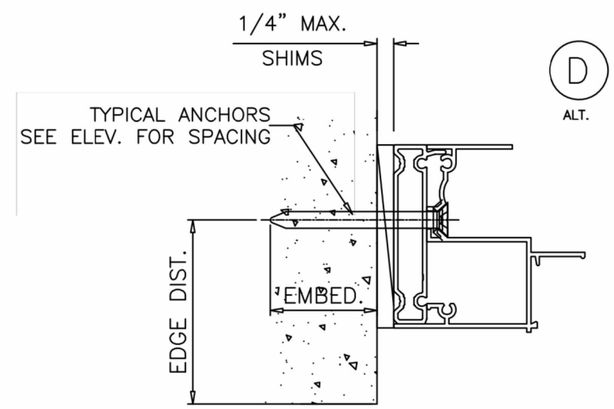

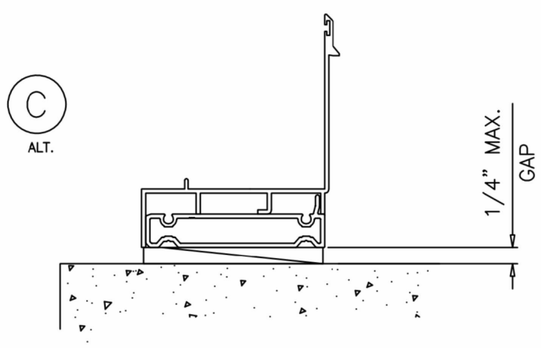

FL#40096.1

JAVAD AHMAD PE, inc
7875 NW 12th St., Suite 102 Doral, FL 33126
Ph: (305) 424-8001
support@ja-pe.com
CONSULTING • STRUCTURAL DESIGN • FACADES • BUILDING ENVELOPE • SYSTEM DESIGN • PRODUCT APPROVALS

drawing no.	JA-1844-24
date:	12/31/2024
drawn by:	MA
check by:	BS

REVISION

No.	DATE	BY	DESCRIPTION

SERIES 100: ECO-GUARD ALUMINUM SINGLE HUNG WINDOW (S.M.I) SMALL MISSILE IMPACT RATED

ECO window systems
ECO WINDOW SYSTEMS, LLC.
8502 N.W. 80th ST. MEDLEY, FL 33166
TEL. (305) 885-5299 FAX. (305) 885-5902

JAVAD AHMAD LICENSE No 70592 STATE OF FLORIDA PROFESSIONAL ENGINEER

SEALED:12/31/2024

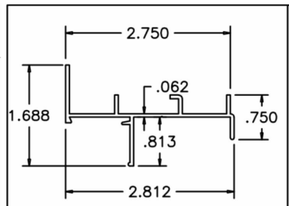

1 FRAME HEAD

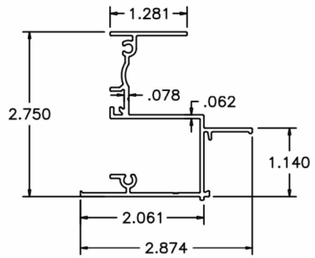

3 FRAME JAMB

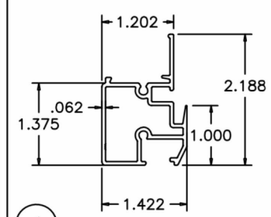

4 FIXED MTG. RAIL

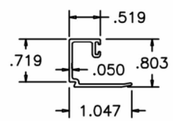

8 GLAZING BEAD

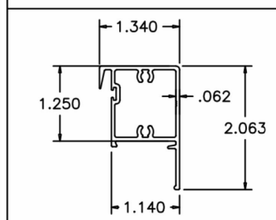

5 VENT TOP RAIL

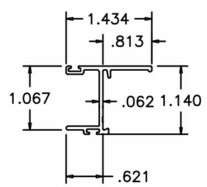

7 VENT SIDE RAIL

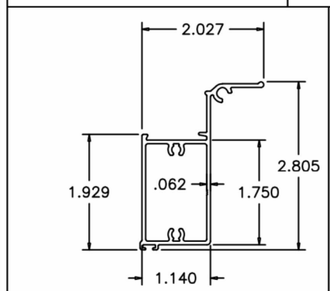

6 VENT BOTTOM RAIL

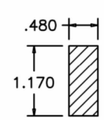

10 MTG. RAIL REINFORCEMENT

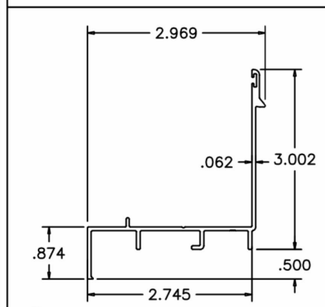

2 FRAME SILL

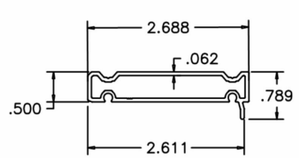

23 FLUSH FRAME ADAPTER

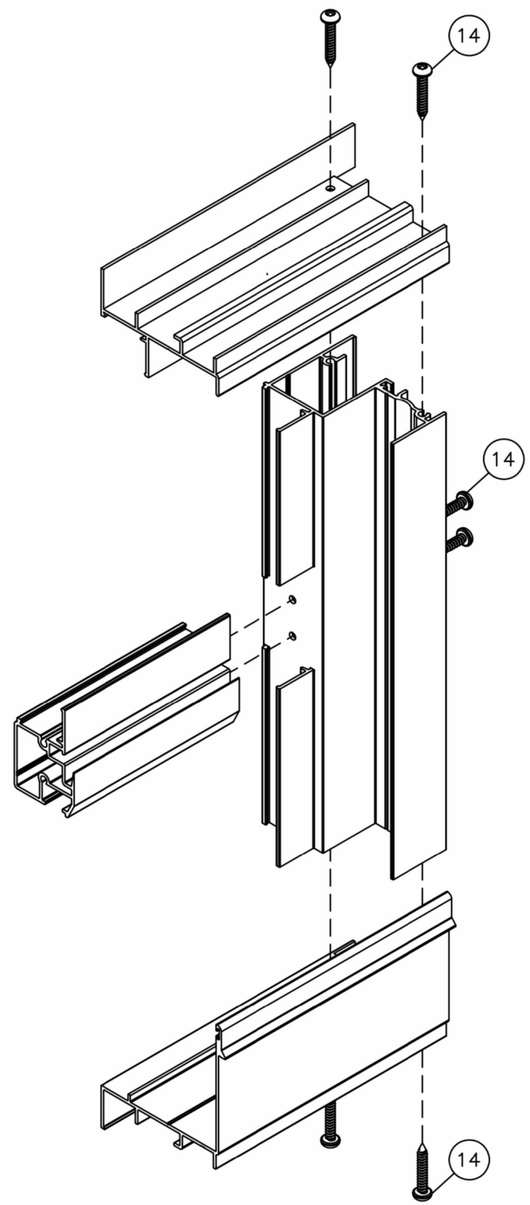

FRAME CORNER DETAIL

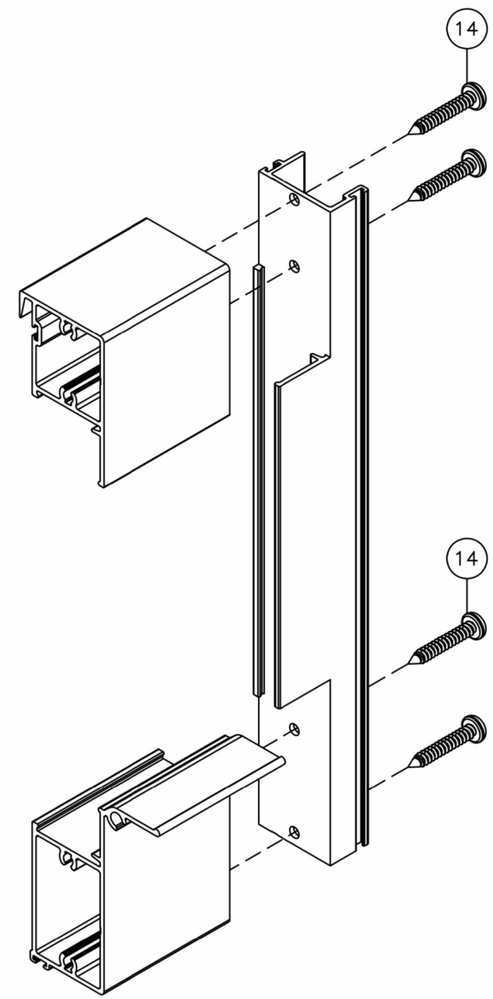

VENT CORNER DETAIL

FL#40096.1

JAVAD AHMAD PE, inc
7875 NW 12th St., Suite 102 Doral, FL 33126
Ph: (305) 424-8001
support@ja-pe.com
CONSULTING • STRUCTURAL DESIGN • FACADES • BUILDING ENVELOPE • SYSTEM DESIGN • PRODUCT APPROVALS

drawing no.	JA-1844-24
date:	12/31/2024
drawn by:	MA
check by:	BS

REVISION

No.	DATE	BY	DESCRIPTION

SERIES 100: ECO-GUARD ALUMINUM SINGLE HUNG WINDOW (S.M.I) SMALL MISSILE IMPACT RATED

eco window systems
ECO WINDOW SYSTEMS, LLC.
8502 N.W. 80th ST. MEDLEY, FL 33166
TEL. (305) 885-5299 FAX. (305) 885-5902

JAVAD AHMAD LICENSE No 70592 STATE OF FLORIDA PROFESSIONAL ENGINEER

SEALED:12/31/2024